HYDRAULIC FILTRATION
PRODUCTS

HIGH PRESSURE FILTERS

PASSION TO PERFORM

MPFILTRI®

A WORLDWIDE LEADER IN THE FIELD OF HYDRAULIC FILTRATION EQUIPMENT.

Our company started life in 1964, when Bruno Pasotto decided to attempt to cater for the requests of a market still to be fully explored, with the study, design, development, production and marketing of a vast range of filters for hydraulic equipment, capable of satisfying the needs of manufacturers in all sectors. The quality of our products, our extreme competitiveness compared with major international producers and our constant activities of research, design and development has made us a worldwide leader in the field of hydraulic circuit filtering.
Present for over 50 years in the market, we have played a truly decisive role in defining our sector, and by now we are a group capable of controlling our entire chain of production, monitoring all manufacturing processes to guarantee superior quality standards and to provide concrete solutions for the rapidly evolving needs of customers and the market.

MARKET **LEADER**

Our work is based on a skillful interaction between advanced technology and fine workmanship, **customizing products according to specific market requests**, focusing strongly on innovation and quality, and following every step in the manufacturing of both standard and special products, fully respecting customer expectations.

Our customer-oriented philosophy, which enables us to satisfy all customer requests **rapidly** and **with personalized products**, makes us a **dynamic and flexible enterprise**. The possibility of constantly controlling and monitoring the entire production process is essential to allow us to guarantee the quality of our products.

WORLDWIDE PRESENCE

Our foreign Branches enable us to offer a diversified range of products that allow us to successfully face the aggressive challenge of international competition, and also to maintain a stable presence at a local level.

The Group boasts **9** **business branches**

TECHNOLOGY

Our constant **quest for excellence in quality and technological innovation** allows us to offer only the best solutions and services for applications in many fields, including general industry, test rigs, lubrication, heavy engineering, renewable energies, naval engineering, offshore engineering, aviation systems, emerging technologies and mobile plant (i.e. tractors, excavators, concrete pumps, platforms).

AND PRODUCTION

Our high level of technological expertise means **we can rely entirely on our own resources, without resorting to external providers.** This in turn enables us to satisfy a growing number of customer requests, also exploiting our constantly updated range of machines and equipment, featuring **fully-automated workstations** capable of **24-hour production**.

SUCTION FILTERS

Flow rates
up to 875 l/min

Mounting:
- Tank immersed
- In-Line
- In tank with shut off valve
- In tank with flooded suction

RETURN FILTERS

Flow rates
up to 3000 l/min

Pressure
up to 20 bar

Mounting:
- In-Line
- Tank top
- In single and duplex designs

RETURN / SUCTION FILTERS

Flow rates
up to 300 l/min

Pressure
up to 80 bar

Mounting:
- In-Line
- Tank top

SPIN-ON FILTERS

Flow rates
up to 365 l/min

Pressure
up to 35 bar

Mounting:
- In-Line
- Tank top

LOW & MEDIUM PRESSURE FILTERS

Flow rates
up to 3000 l/min

Pressure
up to 80 bar

Mounting:
- In-Line
- Parallel manifold version
- In single and duplex designs

HIGH PRESSURE FILTERS

Flow rates
up to 750 l/min

Pressure from 110 bar
up to 560 bar

Mounting:
- In-Line
- Manifold
- In single and duplex designs

PRODUCT RANGE

MP Filtri can offer a vast and articulated range of products for the global market, suitable for all industrial sectors using hydraulic equipment.

This includes filters (suction, return, return/suction, spin-on, pressure, stainless steel pressure) and structural components (motor/pump bell-housings, transmission couplings, damping rings, foot brackets, aluminium tanks, cleaning covers).

We can provide all the skills and solutions required by the modern hydraulics industry to monitor contamination levels and other fluid conditions.

Mobile filtration units and a full range of accessories allow us to supply everything necessary for a complete service in the hydraulic circuits.

STAINLESS STEEL HIGH PRESSURE FILTERS

Flow rates
up to 125 l/min

Pressure from 320 bar
up to 1000 bar

Mounting:
- In-Line
- Manifold
- In single
  and duplex designs

CONTAMINATION MONITORING PRODUCTS

- Online, in-line particle counters
- Off-line bottle sampling products
- Fully calibrated using relevant ISO standards
- A wide range of variants to support fluid types and communication protocols

MOBILE FILTRATION UNITS

Flow rates from 15 l/min
up to 200 l/min

POWER TRANSMISSION PRODUCTS

- Aluminium bell-housings for motors from 0.12 kW to 400 kW
- Couplings in Aluminium Cast Iron - Steel
- Damping rings
- Foot bracket
- Aluminium tanks
- Cleaning covers

TANK ACCESSORIES

- Oil filler and air breather plugs
- Optical and electrical level gauges
- Pressure gauge valve selectors
- Pipe fixing brackets
- Pressure gauges

HYDRAULIC FILTRATION PRODUCTS

1 page	INTRODUCTION
1	COMPANY
6	PRODUCT RANGE
11	CONTAMINATION MANAGEMENT
22	FILTER SIZING
24	CORRECTIVE FACTOR

28 page	SUCTION FILTERS		up to Q_{max} l/min	up to Q_{max} gpm
31	STR & MPA - MPM	Submerged suction filter, with bypass or magnetic filter	1000	264
39	SF2 250 - 350	Semi-submerged positive head suction filter, low flow rate	160	42
47	SF2 500	Semi-submerged positive head suction filter, high flow rate	700	185
57	CLOGGING INDICATORS			

60 page	RETURN FILTERS		up to P_{max} bar	up to P_{max} psi	up to Q_{max} l/min	up to Q_{max} gpm
63	MPFX	Tank top semi-immersed filter, standard filter element disassembly	8	116	900	238
91	MPLX	Tank top semi-immersed filter, standard filter element disassembly	10	145	1800	476
99	MPTX	Tank top semi-immersed filter, easy filter element disassembly	8	116	300	79
117	MFBX	Bowl assembly	8	116	700	185
125	MPF	Tank top semi-immersed filter, standard filter element disassembly	8	116	900	238
153	MPT	Tank top semi-immersed filter, easy filter element disassembly	8	116	300	79
171	MFB	Bowl assembly	8	116	700	185
179	MPH	Tank top semi-immersed filter, standard filter element disassembly	10	145	3500	925
203	MPI	Tank top semi-immersed filter, standard filter element disassembly	10	145	3500	925
215	FRI	Tank top semi-immersed filter, easy filter element disassembly, it can be used also as in-line filter	20	290	2500	660
231	RF2	Semi-immersed under-head filter, easy filter element disassembly	20	290	615	162
238	CLOGGING INDICATORS					
248	ACCESSORIES					

250 page	RETURN / SUCTION FILTERS		up to P_{max} bar	up to P_{max} psi	up to Q_{max} l/min	up to Q_{max} gpm
253	MRSX	Unique TANK TOP filter for mobile machinery, with combined filtration on return and suction to the inlet at the hydrostatic transmissions in closed circuit	10	145	250	66
265	LMP 124 MULTIPORT	Unique IN-LINE filter for mobile machinery, with combined filtration on return and suction to the inlet at the hydrostatic transmissions in closed circuit	80	1160	120	32
273	CLOGGING INDICATORS					

286 page	SPIN-ON FILTERS		up to P_{max} bar	up to P_{max} psi	up to Q_{max} l/min	up to Q_{max} gpm
289	MPS	Low pressure filter, available with single cartridge (CS) for in-line or flange mounting or with two cartridge on the same axis on the opposite sides	12	174	365	96
305	MSH	In-line low and medium pressure filter available with single cartridge (CH)	35	508	195	52
311	CLOGGING INDICATORS					

INDEX

322 page		LOW & MEDIUM PRESSURE FILTERS	up to P_{max} bar	psi	up to Q_{max} l/min	gpm
325	LMP 110 - 120 - 123 MULTIPORT	In-line filter with Multiport design for multiple choice connection	80	1160	175	46
341	LMP 210 - 211	In-line low & medium pressure filter, low flow rate	60	870	365	96
351	LMP 400 - 401 & 430 - 431	In-line low & medium pressure filter, high flow rate	60	870	780	206
363	LMP 950 - 951	In-line filter, available with 2 and up to 6 different heads	30	435	2400	634
371	LMP 952 - 953 - 954	In-line low pressure filter specifically designed to be mounted in series	25	363	4500	1189
383	LMD 211	In-line duplex medium pressure filter	60	870	200	53
391	LMD 400 - 401 & 431	In-line duplex low pressure filter	16	232	600	159
407	LMD 951	In-line duplex filter, available with 2 up to 6 different heads	16	232	1200	317
415		Filter elements designed according to DIN 24550				
417	LDP - LDD	In-line and duplex medium pressure filter	60	870	360	95
427	LMP 900 - 901	In-line low pressure filter	30	435	2000	528
435	LMP 902 - 903	In-line filter specifically designed to be mounted in series	20	290	3000	793
444	CLOGGING INDICATORS					
450	ACCESSORIES					

452 page		HIGH PRESSURE FILTERS	up to P_{max} bar	psi	up to Q_{max} l/min	gpm
455	FMP 039	Filter high pressure, low flow rate applications	110	1595	80	21
463	FMP	Filter high pressure, high flow rate applications	320	4641	500	132
475	FHP	Typical high pressure filter for mobile applications, high flow rate	420	6092	630	166
493	FMM	Typical high pressure filter for mobile applications, low flow rate	420	6092	300	79
503	FHA 051	Filter optimized for use in high pressure operating systems, low flow rate	560	8122	150	40
511	FHM	High pressure filter with intermediate manifold construction	320	4641	400	106
529	FHB	High pressure for block mounting	320	4641	485	128
543	FHF 325	In-line manifold top mounting	350	5076	550	145
553	FHD	In-line duplex high pressure filter	350	5076	250	66
567	HPB	Pressure filter kits for integration in control manifolds	420	6092	300	79
576	CLOGGING INDICATORS					

584 page		STAINLESS STEEL HIGH PRESSURE FILTERS	up to P_{max} bar	psi	up to Q_{max} l/min	gpm
587	FZP	In-line pressure filter with threaded mount	420	6092	160	42
597	FZH	In-line pressure filter with threaded mount for higher pressure	700	10153	80	21
607	FZX	In-line pressure filter with threaded mount up to 1000 bar	1000	14504	10	3
615	FZM	Manifold top mounting	320	4641	70	18
623	FZB	Manifold side mounting	320	4641	70	18
631	FZD	Duplex pressure filter for continuous operation requirements	350	5076	60	16
641	CLOGGING INDICATORS					

646 page		CLOGGING INDICATORS
649	QUICK REFERENCE GUIDE	

THE CORRECT FILTER SIZING HAVE TO BE BASED ON THE TOTAL PRESSURE DROP DEPENDING BY THE APPLICATION.
FOR EXAMPLE, THE MAXIMUM TOTAL PRESSURE DROP ALLOWED BY A NEW AND CLEAN RETURN FILTER HAVE TO BE IN THE RANGE 0.4 - 0.6 bar / 5.80 - 8.70 psi.

The pressure drop calculation is performed by adding together the value of the housing with the value of the filter element. The pressure drop Δpc of the housing is proportional to the fluid density (kg/dm³ / lb/ft³).
The filter element pressure drop Δpe is proportional to its viscosity (mm²/s / SUS), the corrective factor Y have to be used in case of an oil viscosity different than 30 mm²/s (cSt) / 150 SUS.

Sizing data for single filter element, head at top

Δpc = Filter housing pressure drop [bar / psi]
Δpe = Filter element pressure drop [bar / psi]
Y = Corrective factor Y (see correspondent table), depending on the filter type, on the filter element size, on the filter element length and on the filter media
Q = flow rate (l/min - gpm)
V1 reference oil viscosity = 30 mm²/s (cSt) /150 SUS
V2 = operating oil viscosity in mm²/s (cSt) / SUS

Filter element pressure drop calculation with an oil viscosity different than 30 mm²/s (cSt) / 150 SUS

International system:
Δpe = Y : 1000 x Q x (V2:V1)

Imperial system:
Δpe = Y : 17.2 x Q x (V2:V1)

Δp Tot. = Δpc + Δpe

Verification formula

Δp Tot. ≤ Δp max allowed

Maximum total pressure drop (Δp max) allowed by a new and clean filter

Application	Range:[bar]	[psi]	
Suction filters	0.08 - 0.10 bar	1.16 - 1.45 psi	
Return filters	0.4 - 0.6 bar	5.80 - 8.70 psi	
Return - Suction filters (*)	0.8 - 1.0 bar	11.60 - 14.50 psi	
Low & Medium Pressure filters	0.4 - 0.6 bar	5.80 - 8.70 psi	return lines
	0.3 - 0.5 bar	4.35 - 7.25 psi	lubrication lines
	0.3 - 0.4 bar	4.35 - 5.80 psi	off-line in power systems
	0.1 - 0.3 bar	1.45 - 4.35 psi	off-line in test benches
	0.4 - 0.6 bar	5.80 - 8.7 psi	over-boost
High Pressure filters	0.8 - 1.5 bar	11.60 - 21.75 psi	
Stainless Steel filters	0.8 - 1.5 bar	11.60 - 21.75 psi	

(*) The suction flow rate should not exceed 30% of the return flow rate

Generic filter calculation example

Application data:
Tank top return filter
Pressure Pmax = 10 bar
Flow rate Q = 120 l/min
Viscosity V2 = 46 mm²/s (cSt)
Oil density = 0.86 kg/dm³
Required filtration efficiency = 25 µm with absolute filtration
With bypass valve and G 1 1/4" inlet connection

Calculation:
Δpc = 0.03 bar / 0.43 psi (see graphic below)

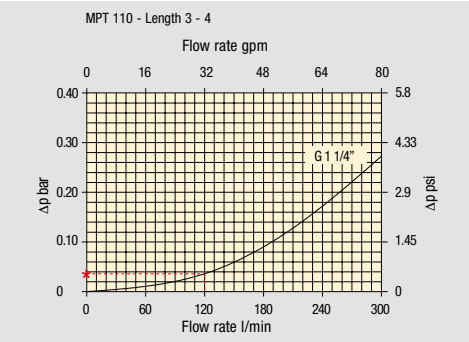

Filter housings Δp pressure drop.
The curves are plotted using mineral oil with density of 0.86 kg/dm³ in compliance with ISO 3968.
Δp varies proportionally with density.

Δpe = (2.00 : 1000) x 120 x (46 : 30) = 0.37 bar
Δpe = (2.00 : 17.2) x 32 x (216 : 150) = 5.36 psi

Filter element		Absolute filtration H Series					Nominal filtration N Series		
Type		A03	A06	A10	A16	A25	P10	P25	M25 M60 M90
Return filters		74.00	50.08	20.00	16.00	9.00	6.43	5.51	4.40
MF 020	2	29.20	24.12	8.00	7.22	5.00	3.33	2.85	2.00
	3	22.00	19.00	6.56	5.33	4.33	1.68	1.44	1.30
MF 030 MFX 030	1	74.00	50.08	20.00	16.00	9.00	6.43	5.51	3.40
MF 100 MFX 100	1	28.20	24.40	8.67	8.17	6.88	4.62	3.96	1.25
	2	17.33	12.50	6.86	5.70	4.00	3.05	2.47	1.10
	3	10.25	9.00	3.65	3.33	2.50	1.63	1.32	0.96
	4	6.10	5.40	2.30	2.20	2.00	1.19	0.96	0.82

Δp Tot. = 0.03 + 0.37 = 0.4 bar
Δp Tot. = 0.43 + 5.36 = 5.79 psi

The selection is correct because the total pressure drop value is inside the admissible range for top tank return filters.
In case the allowed max total pressure drop is not verified, it is necessary to repeat the calculation changing the filter length/size.

Corrective factor

Corrective factor Y to be used for the filter element pressure drop calculation. The values depend to the filter size and length and to the filter media.
Reference oil viscosity 30 mm²/s

High pressure filters

Filter element		Absolute filtration N - R Series					Nominal filtration N Series
Type		A03	A06	A10	A16	A25	M25
HP 011	1	332.71	250.07	184.32	152.36	128.36	-
	2	220.28	165.56	74.08	59.13	37.05	-
	3	123.24	92.68	41.48	33.08	20.72	-
	4	77.76	58.52	28.37	22.67	16.17	-
HP 039	2	70.66	53.20	25.77	20.57	14.67	4.90
	3	36.57	32.28	18.00	13.38	8.00	2.90
	4	26.57	23.27	12.46	8.80	5.58	2.20
HP 050	1	31.75	30.30	13.16	12.3	7.29	1.60
	2	24.25	21.26	11.70	9.09	4.90	1.40
	3	17.37	16.25	8.90	7.18	3.63	1.25
	4	12.12	10.75	6.10	5.75	3.08	1.07
	5	7.00	6.56	3.60	3.10	2.25	0.80
HP 065	1	58.50	43.46	23.16	19.66	10.71	1.28
	2	42.60	25.64	16.22	13.88	7.32	1.11
	3	20.50	15.88	8.18	6.81	3.91	0.58
HP 135	1	20.33	18.80	9.71	8.66	4.78	2.78
	2	11.14	10.16	6.60	6.38	2.22	1.11
	3	6.48	6.33	3.38	3.16	2.14	1.01
HP 150	1	17.53	15.91	7.48	6.96	5.94	1.07
	2	8.60	8.37	3.54	3.38	3.15	0.58
	3	6.53	5.90	2.93	2.79	2.12	0.49
HP 320	1	10.88	9.73	5.02	3.73	2.54	1.04
	2	4.40	3.83	1.75	1.48	0.88	0.71
	3	2.75	2.11	1.05	0.87	0.77	0.61
	4	2.12	1.77	0.98	0.78	0.55	0.47
HP 500	1	4.44	3.67	2.30	2.10	1.65	0.15
	2	3.37	2.77	1.78	1.68	1.24	0.10
	3	2.22	1.98	1.11	1.09	0.75	0.08
	4	1.81	1.33	0.93	0.86	0.68	0.05
	5	1.33	1.15	0.77	0.68	0.48	0.04

		Absolute filtration - N Series					
Type		A03	A06	A10	A16	A25	M25
HF 325	1	3.65	2.95	2.80	1.80	0.90	0.38
	2	2.03	1.73	1.61	1.35	0.85	0.36
	3	1.84	1.42	1.32	1.22	0.80	0.35

TYPICAL FILTER SIZING Selection Software

Step 1

Select “FILTER SIZING SOFTWARE” after login

OR

Select “FILTER SIZING” after login from a product page

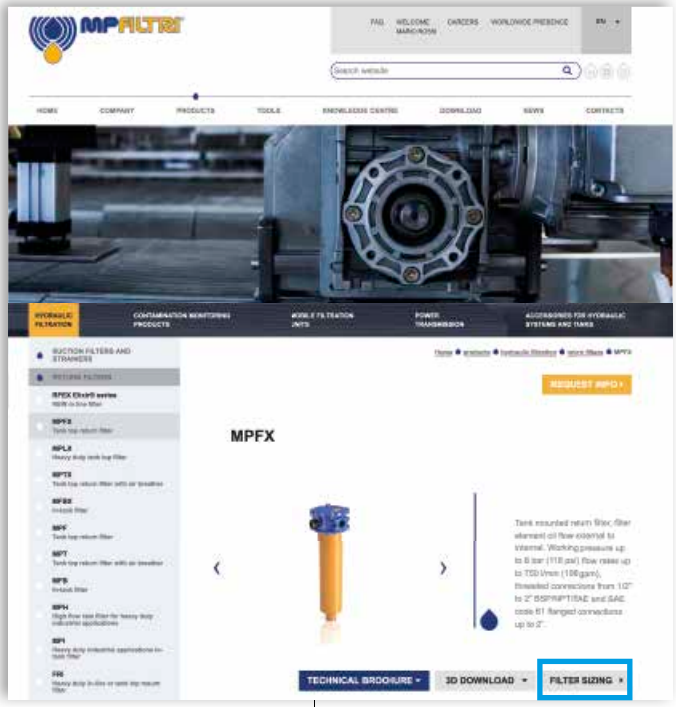

Step 2

Choose the type of filter family.
Enter the main data for sizing the filter
then push CALCULATE.

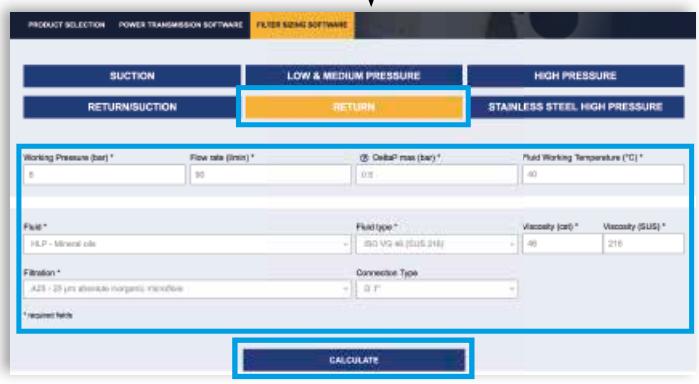

Enter the main data for sizing the filter
then push CALCULATE.

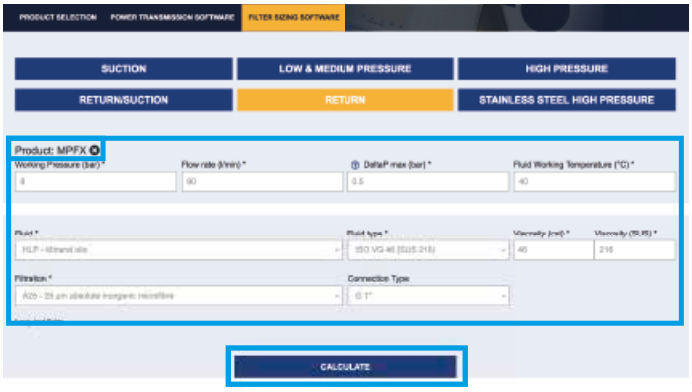

Step 3

Select the desidered options to choose the appropriate filter type for the application.

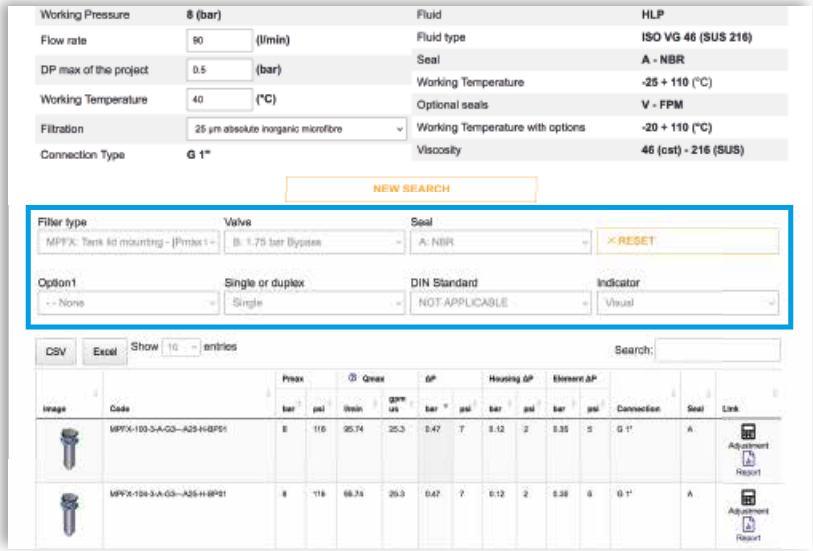

Step 4

Choose the most suitable filter from the proposed list.

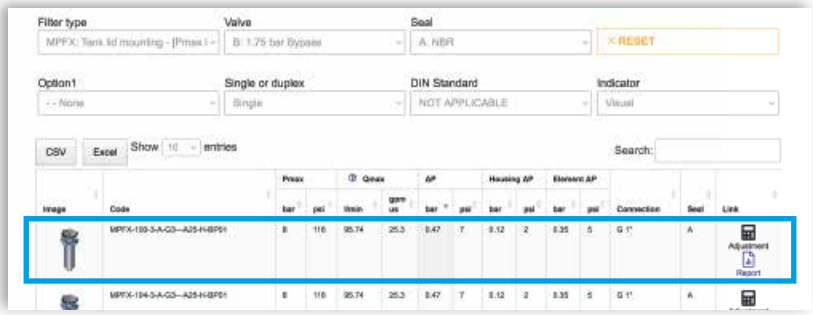

Step 5

A SAVE YOUR FILTER'S REPORT

B MANUAL EDIT

It is possible to change the filter modifying every parameter.

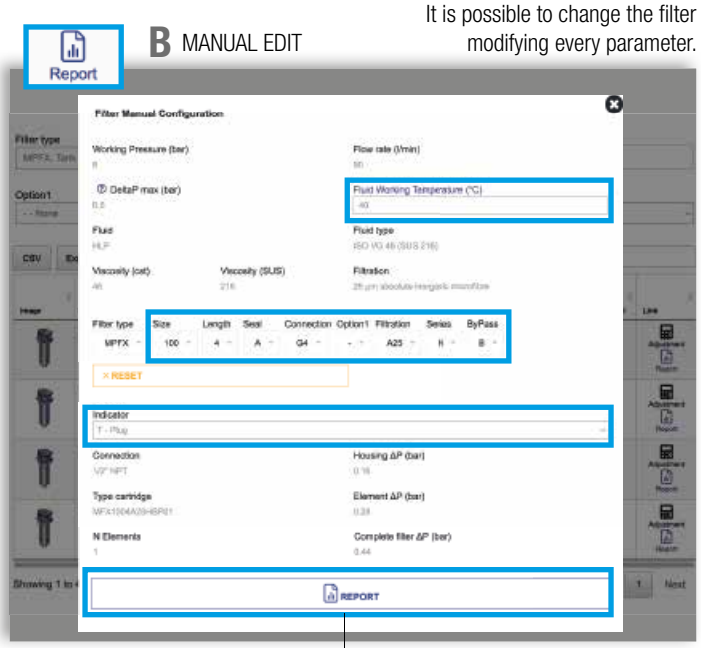

SAVE IN YOUR ARCHIVE
typing your reference data and then SAVE AS PDF

A new browser window displays the pdf

see **A**

Close the report window

By clicking your WELCOME button, the SHOW REPORTS is displayed: select it to see your filters list.

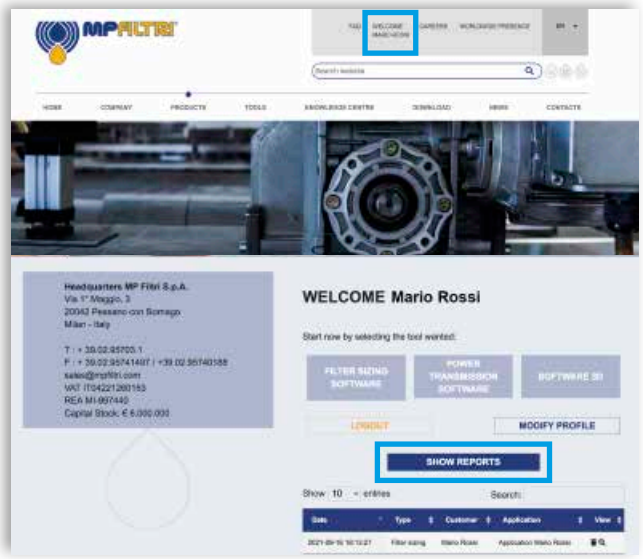

High pressure filters are used as process filters to protect individual valves or the entire hydraulic circuit from contamination as per ISO 4406.
9 versions are available with operating pressures range from 110 bar up to 560 bar.
A range of products is available to resolve all filter mounting problems, in the following configurations:

- In-line, with threaded and flange mounting
- Manifold top mounting
- Manifold side mounting
- Manifold mounting, to DIN 24340 CETOP R 35 H
- Manifold threaded/flange mounting in the top extraction filter cartridge version
- Duplex versions for continuous operation requirements

FMP series is specifically designed and suitable for:
- feed pumps of hydrostatic drives
- pressure lubrication
- hydraulic systems in the high pressure range

FMM series is optimized for the protection of servo and proportional hydraulics:
- in agricultural machinery
- in construction machinery
- in commercial vehicles

HPB are kits designed for the direct integration into the control block; they can be easily integrated into the block through a simple cavity.

FHP & FHA series are the typical high-pressure filters optimized for industrial applications.

FHM series is designed for intermediate plate construction, CETOP design.

FHB series is designed for block mounting; the filter head can be screwed in from the outside.

FHF series is designed to assemble HF4 filter element according to SAE J2066.

FHD series is the duplex high pressure filter; with two independent filter heads, the flow can be switched without interruption during operation.

The range includes a complete set of valves:
- Bypass valve
- Check valve
- Bypass + check valve
- Reverse-flow valve
- Reverse-flow + bypass valve

FILTER SIZING

For the proper corrective factor Y see chapter at page 25

High pressure filters

FMP 039	page 455
FMP	463
FHP	475
FMM	493
FHA 051	503
FHM	511
FHB	page 529
FHF 325	543
FHD	553
HPB	567
INDICATORS	576

FMP 039 series

Maximum working pressure up to 11 MPa (110 bar) - Flow rate up to 80 l/min

FMP 039 GENERAL INFORMATION

Description

High Pressure filters

In-line
Maximum working pressure up to 11 MPa (110 bar)
Flow rate up to 80 l/min

FMP039 is a range of versatile medium pressure filter for transmission, protection of sensitive components in medium pressure hydraulic systems and filtration of the coolant into the machine tools.
They are directly connected to the lines of the system through the hydraulic fittings.

Available features:
- 1/2" female threaded connections, for a maximum flow rate of 80 l/min
- Fine filtration rating, to get a good cleanliness level into the system
- Bypass valve, to relieve excessive pressure drop across the filter media
- Low collapse filter element "N", for use with filters provided with bypass valve
- Visual, electrical and electronic differential clogging indicators

Common applications:
Delivery lines, in any medium pressure industrial equipment or mobile machines

Technical data

Filter housing materials
- Head: Anodized aluminium
- Housing: Anodized aluminium
- Bypass valve: Steel

Pressure
- Test pressure: 17 MPa (170 bar)
- Burst pressure: 33 MPa (330 bar)
- Pulse pressure fatigue test: 1 000 000 cycles with pressure from 0 to 11 MPa (110 bar)

Bypass valve
- Opening pressure 600 kPa (6 bar) ±10%
- Other opening pressures on request.

Δp element type
- Microfibre filter elements - series N: 20 bar
- Wire mesh filter elements - series N: 20 bar
- Fluid flow through the filter element from OUT to IN.

Seals
- Standard NBR series A
- Optional FPM series V

Temperature
From -25 °C to +110 °C

Connections
In-line Inlet/Outlet

Note
FMP 039 filters are provided for vertical mounting

Weights [kg] and volumes [dm³]

Filter series	Weights [kg]				Volumes [dm³]			
	Length	2	3	4	Length	2	3	4
FMP 039		0.60	0.70	0.80		0.19	0.26	0.34

Executions

Execution 1:
without indicator connection

Execution 6
double indicator connection (A - B)

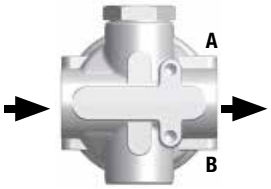

A:
Closure cap with standard T2 steel. The position of the cap is reversible.

B:
Standard closure cap with plastic thread protection.

If necessary, a second T2 plug is available, see ordering information.

Special connections on request

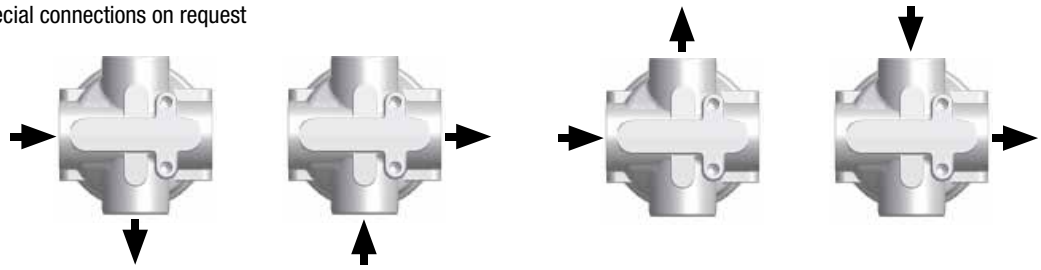

FILTER ASSEMBLY SIZING
Flow rates [l/min]

		Filter element design - N Series					
Filter series	Length	A03	A06	A10	A16	A25	M25
	2	20	26	45	52	61	97
FMP 039	3	35	39	56	64	76	98
	4	44	48	66	71	82	92

Maximum flow rate for a complete pressure filter with a pressure drop Δp = 1.5 bar.
The reference fluid has a kinematic viscosity of 30 mm^2/s (cSt) and a density of 0.86 kg/dm^3.
For different pressure drop or fluid viscosity we recommend to use our selection software available on www.mpfiltri.com.
You can also calculate the right size using the formulas present on the FILTER SIZING paragraph at the beginning of the full catalogue or at the beginning of the filter family brochure.
Please, contact our Sales Department for further additional information.

Hydraulic symbols

Filter series	Style S	Style B
FMP 039	•	•

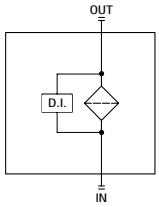

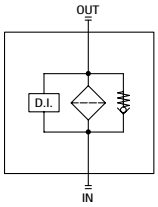

Pressure drop

Filter housings Δp pressure drop

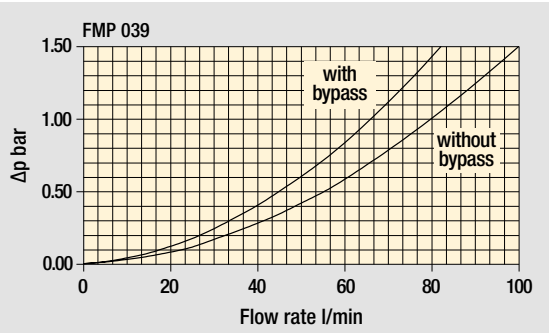

Bypass valve pressure drop

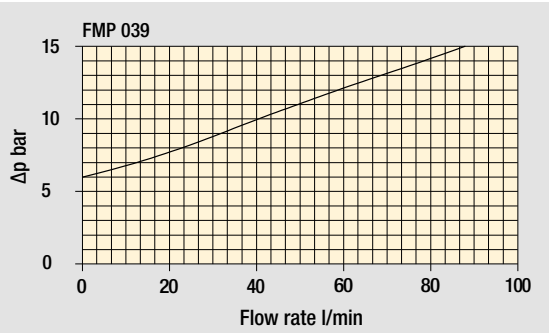

The curves are plotted using mineral oil with density of 0.86 kg/dm^3 in compliance with ISO 3968. Δp varies proportionally with density.

FMP 039

Designation & Ordering code

COMPLETE FILTER

Configuration example: FMP039 | 3 | B | A | B | 6 | A03 | N | P01

Series and size
FMP039

Length
2 | **3** | **4** |

Valves
S Without bypass
B 6 bar

Seals
A NBR
V FPM

Connections
A G 1/2”
B 1/2” NPT
C SAE 8 - 3/4” - 16 UNF

Connection for differential indicator
1 Without
6 With two connections on both sides

Filtration rating (filter media)

A03	Inorganic microfiber	3 µm	**A16**	Inorganic microfiber	16 µm
A06	Inorganic microfiber	6 µm	**A25**	Inorganic microfiber	25 µm
A10	Inorganic microfiber	10 µm	**M25**	Wire mesh	25 µm

Element Δp
N 20 bar

Execution
P01 MP Filtri standard
Pxx Customized

FILTER ELEMENT

Configuration example: HP039 | 3 | A03 | A | N | P01

Element series and size
HP039

Element length
2 | **3** | **4** |

Filtration rating (filter media)

A03	Inorganic microfiber	3 µm	**A16**	Inorganic microfiber	16 µm
A06	Inorganic microfiber	6 µm	**A25**	Inorganic microfiber	25 µm
A10	Inorganic microfiber	10 µm	**M25**	Wire mesh	25 µm

Seals
A NBR
V FPM

Element Δp
N 20 bar

Execution
P01 MP Filtri standard
Pxx Customized

ACCESSORIES

Differential indicators

		page
DEA	Electrical differential indicator	577
DEH	Hazardous area electronic differential indicator	577-578
DEM	Electrical differential indicator	578-579
DLA	Electrical / visual differential indicator	579-580
DLE	Electrical / visual differential indicator	580
DTA	Electronic differential indicator	581
DVA	Visual differential indicator	581
DVM	Visual differential indicator	581

Additional features

		page
T2	Plug	582

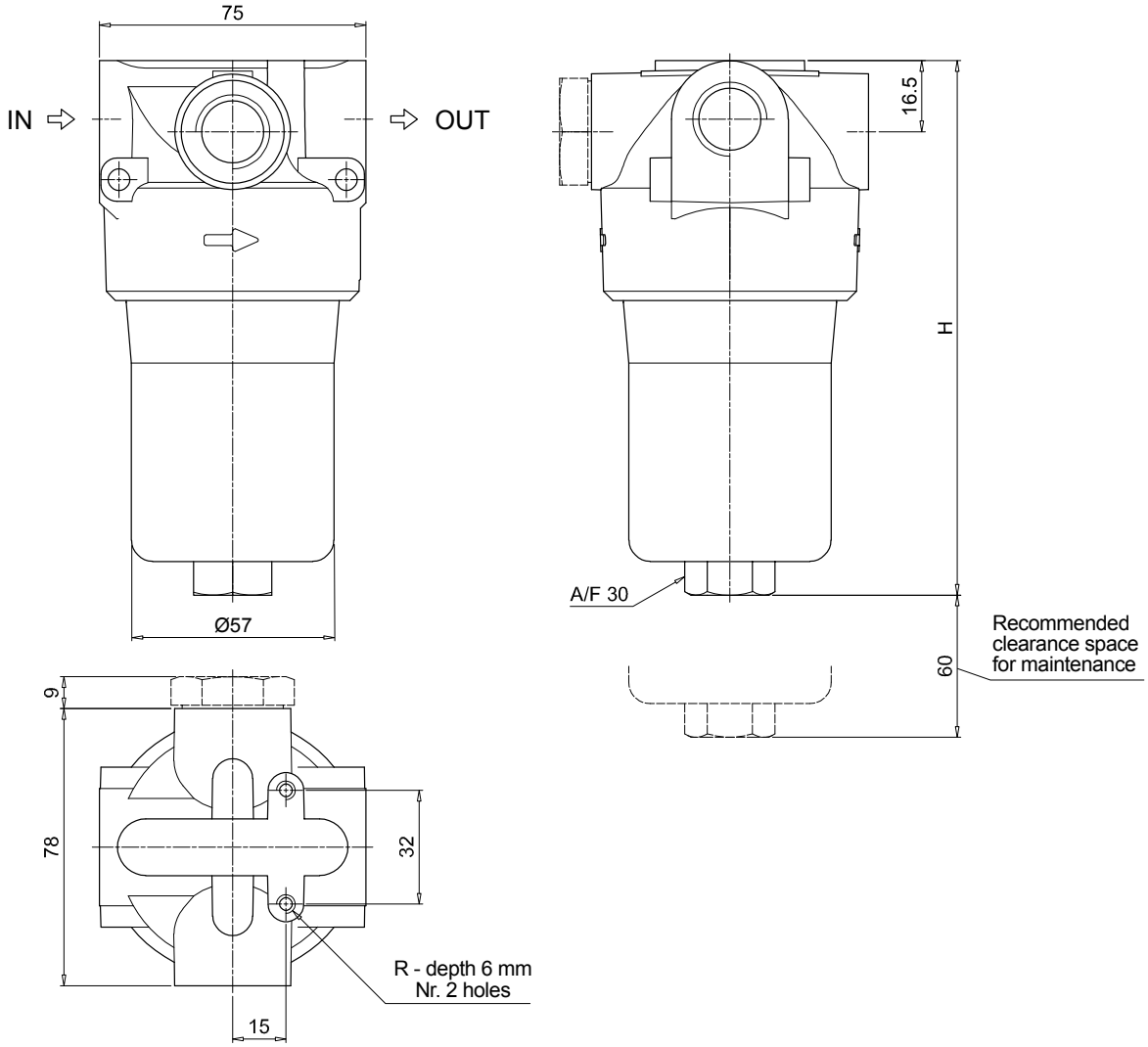

Version 1

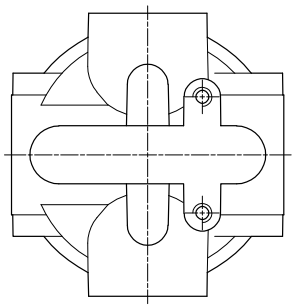

Version 6

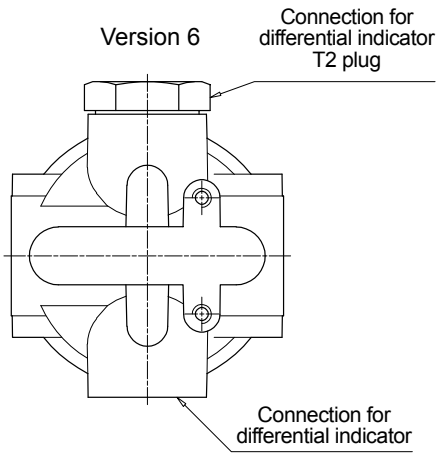

The position of the T2 plug is reversible

FMP039	
Filter length	**H [mm]**
2	151
3	194
4	238

Connections	R
A	M6
B - C	1/4" UNC

FMP 039 SPARE PARTS

Order number for spare parts

FMP 039

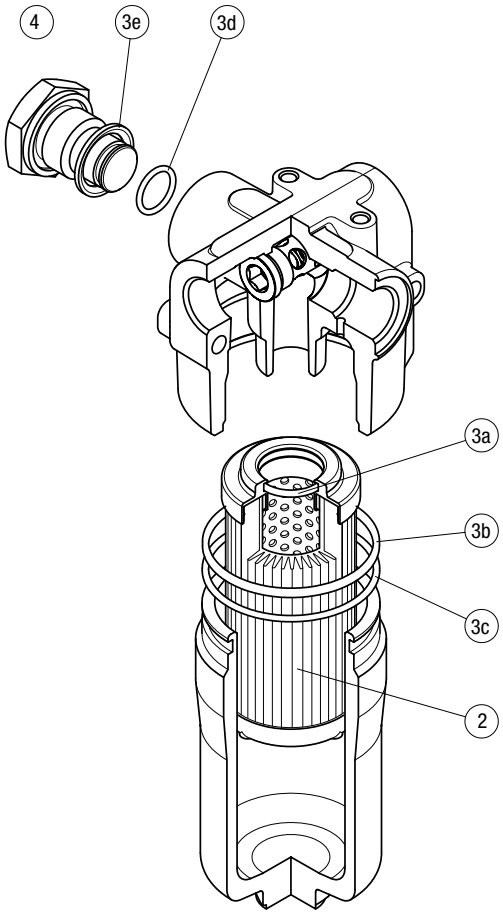

Item:	Q.ty: 1 pc. 2	Q.ty: 1 pc. 3 (3a ÷ 3e)	
Filter series	**Filter element**	**Seal Kit code number NBR**	**FPM**
FMP 039	See order table	02050509	02050510

FMP series

Maximum working pressure up to 32 MPa (320 bar) - Flow rate up to 500 l/min

FMP GENERAL INFORMATION

Description

High Pressure filters

In-line
Maximum working pressure up to 32 MPa (320 bar)
Flow rate up to 500 l/min

FMP is a range of versatile high pressure filter for protection of sensitive components in high pressure hydraulic systems in the industrial equipment.
They are directly connected to the lines of the system through the hydraulic fittings.

Available features:
- Female threaded connections up to 1 1/2" and flanged connections up to 1 1/2", for a maximum flow rate of 475 l/min
- Fine filtration rating, to get a good cleanliness level into the system
- Bypass valve, to relieve excessive pressure drop across the filter media
- Check valve, to protect the system against reverse flow
- Low collapse filter element "N", for use with filters provided with bypass valve
- High collapse filter element "H", for use with filters not provided with bypass valve
- Low collapse filter element with external support "R", for filter element protection against the back pressure caused by the check valve in filters provided with the bypass valve
- High collapse filter element with external support "S", for filter element protection against the back pressure caused by the check valve in filters not provided with the bypass valve
- Visual, electrical and electronic differential clogging indicators

Common applications:
Delivery lines, in any high pressure industrial equipment or mobile machines

Technical data

Filter housing materials
- Head: Phosphatized cast iron
- Housing: Phosphatized steel
- Bypass valve: Brass
- Reverse Flow: Steel (only for series FMP 320)
- Check valve: Steel

Pressure
- Test pressure: 48 MPa (480 bar)
- Burst pressure: 96 MPa (960 bar)
- Pulse pressure fatigue test: 1 000 000 cycles with pressure from 0 to 32 MPa (320 bar)

Bypass valve
- Opening pressure 600 kPa (6 bar) ±10%
- Other opening pressures on request.

Δp element type
- Microfibre filter elements - series N-R: 20 bar
- Microfibre filter elements - series H-S: 210 bar
- Wire mesh filter elements - series N: 20 bar
- Fluid flow through the filter element from OUT to IN

Seals
- Standard NBR series A
- Optional FPM series V

Temperature
From -25 °C to +110 °C

Connections
In-line Inlet/Outlet

Note
FMP filters are provided for vertical mounting

Weights [kg] and volumes [dm³]

Filter series	Weights [kg]					Volumes [dm³]				
	Length	1	2	3	4	Length	1	2	3	4
FMP 065		3.26	3.62	4.83	-		0.36	0.47	0.84	-
FMP 135		5.61	7.21	8.27	-		0.45	0.78	1.00	-
FMP 320		10.95	13.08	15.37	17.85		1.03	1.75	2.52	3.35

FILTER ASSEMBLY SIZING
Flow rates [l/min]

		Filter element design - N Series					
Filter series	Length	A03	A06	A10	A16	A25	M25
FMP 065	1	23	30	48	54	72	105
	2	31	45	60	65	82	106
	3	52	60	80	84	94	108
FMP 135	1	69	73	120	129	171	201
	2	110	117	149	152	211	232
	3	151	152	192	195	212	233
FMP 320	1	130	144	244	296	361	477
	2	267	291	417	438	492	509
	3	348	390	476	493	503	519
	4	389	415	483	502	525	534

Maximum flow rate for a complete pressure filter with a pressure drop Δp = 1.5 bar.
The reference fluid has a kinematic viscosity of 30 mm^2/s (cSt) and a density of 0.86 kg/dm^3.
For different pressure drop or fluid viscosity we recommend to use our selection software available on www.mpfiltri.com.
You can also calculate the right size using the formulas present on the FILTER SIZING paragraph at the beginning of the full catalogue or at the beginning of the filter family brochure.
Please, contact our Sales Department for further additional information.

Hydraulic symbols

Filter series	Style S - E	Style B - C	Style T	Style D
FMP 065	•	•	•	•
FMP 135	•	•	•	•
FMP 320	•	•	•	•

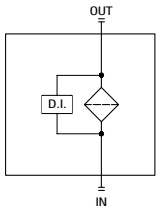

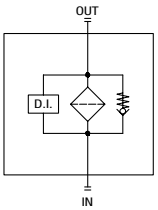

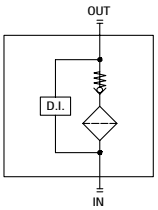

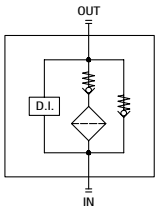

Pressure drop

Filter housings Δp pressure drop

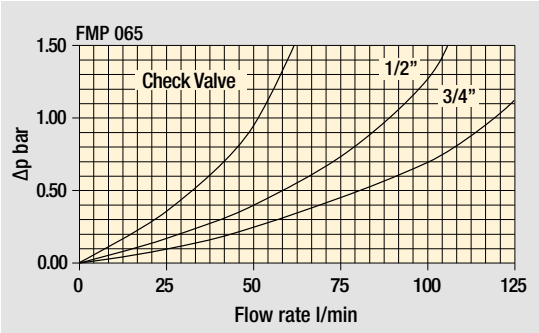

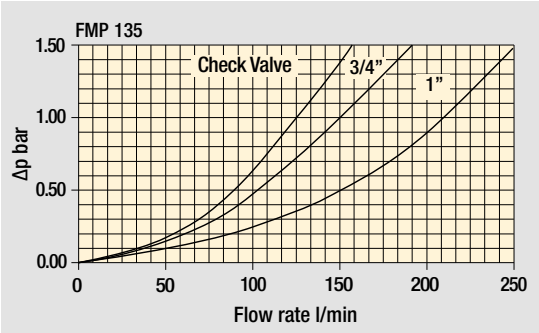

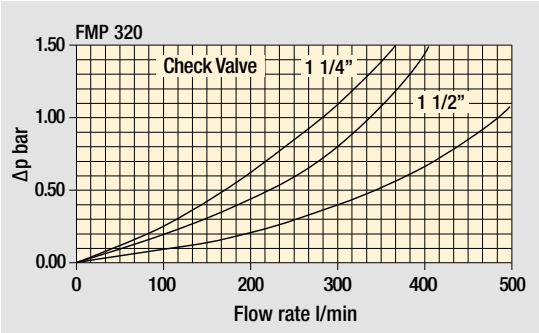

Bypass valve pressure drop

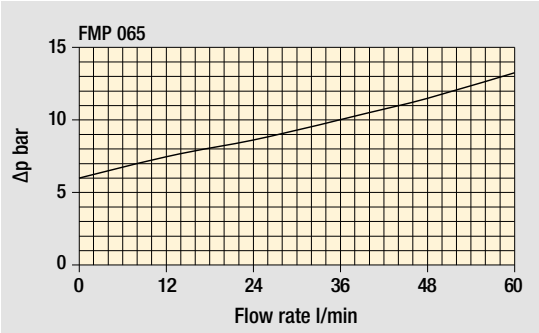

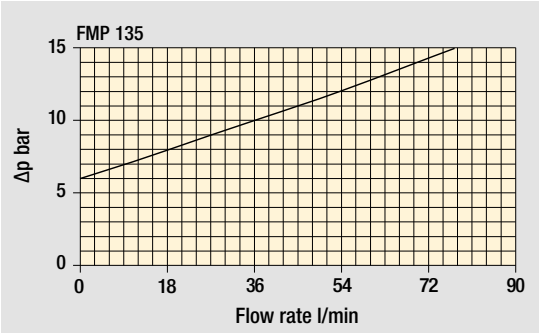

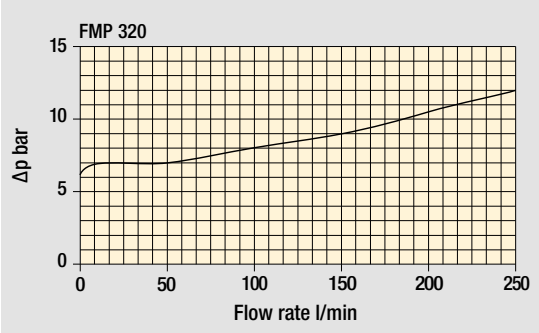

Valves

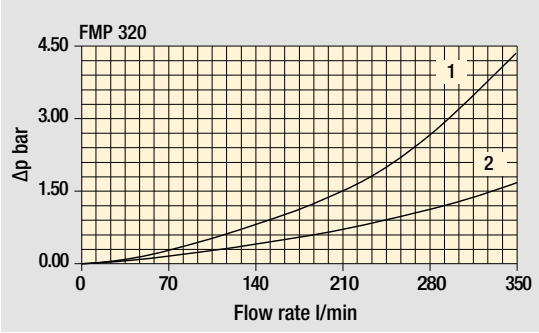

Filter housing with check valve

1 - Reverse flow
2 - In filter direction

The curves are plotted using mineral oil with density of 0.86 kg/dm³ in compliance with ISO 3968. Δp varies proportionally with density.

FMP FMP065 - FMP135 - FMP320

Designation & Ordering code

COMPLETE FILTER

Configuration example: FMP065 | 3 | T | A | G1 | M25 | S | P01

Series and size

FMP065 | FMP135 | FMP320

Length	FMP065	FMP135	FMP320
1	•	•	•
2	•	•	•
3	•	•	•
4			•

Valves

S	Without bypass	**C**	With bypass 6 bar, plug on the opposite side
E	Without bypass, plug on the opposite side	**T**	With check valve, without bypass
B	With bypass 6 bar	**D**	With check valve, with bypass

Seals

A	NBR	**V**	FPM

Connections	FMP065	FMP135	FMP320
G1	G 1/2”	G 3/4”	G 1 1/4”
G2	G 3/4”	G 1”	G 1 1/2”
G3	1/2” NPT	3/4” NPT	1 1/4” NPT
G4	3/4” NPT	1” NPT	1 1/2” NPT
G5	SAE 8 - 3/4” - 16 UNF	SAE 12 - 1 1/16” - 12 UN	SAE 20 - 1 5/8” - 12 UN
G6	SAE 12 - 1 1/16” - 12 UN	SAE 16 - 1 5/16” - 12 UN	SAE 24 - 1 7/8” - 12 UN
F1	-	3/4” SAE 3000 psi/M	1 1/4” SAE 3000 psi/M
F2	-	1” SAE 3000 psi/M	1 1/2” SAE 3000 psi/M
F3	-	3/4” SAE 3000 psi/UNC	1 1/4” SAE 3000 psi/UNC
F4	-	1” SAE 3000 psi/UNC	1 1/2” SAE 3000 psi/UNC

Filtration rating (filter media)

A03	Inorganic microfiber	3 µm
A06	Inorganic microfiber	6 µm
A10	Inorganic microfiber	10 µm
A16	Inorganic microfiber	16 µm
A25	Inorganic microfiber	25 µm
M25	Wire mesh	25 µm

Element Δp		Valves S	E	B	C	T	D
N	20 bar			•	•		
R	20 bar						•
H	210 bar	•	•				
S	210 bar					•	

Execution		Filter length 1	2	3	4
P01	MP Filtri standard	•	•	•	•
P02	Maintenance from the bottom of the housing				•
Pxx	Customized				

FILTER ELEMENT

Configuration example: HP065 | 3 | M25 | A | S | P01

Element series and size

HP065 | HP135 | HP320

Element length	HP065	HP135	HP320
1	•	•	•
2	•	•	•
3	•	•	•
4			•

Filtration rating (filter media)

A03	Inorganic microfiber	3 µm
A06	Inorganic microfiber	6 µm
A10	Inorganic microfiber	10 µm
A16	Inorganic microfiber	16 µm
A25	Inorganic microfiber	25 µm
M25	Wire mesh	25 µm

Seals

A	NBR
V	FPM

Element Δp

N	20 bar
R	20 bar
H	210 bar
S	210 bar

Execution

P01	MP Filtri standard
Pxx	Customized

ACCESSORIES

Differential indicators

		page
DEA	Electrical differential indicator	577
DEH	Hazardous area electronic differential indicator	577-578
DEM	Electrical differential indicator	578-579
DLA	Electrical / visual differential indicator	579-580
DLE	Electrical / visual differential indicator	580
DTA	Electronic differential indicator	581
DVA	Visual differential indicator	581
DVM	Visual differential indicator	581

Additional features

		page
T2	Plug	582

Dimensions

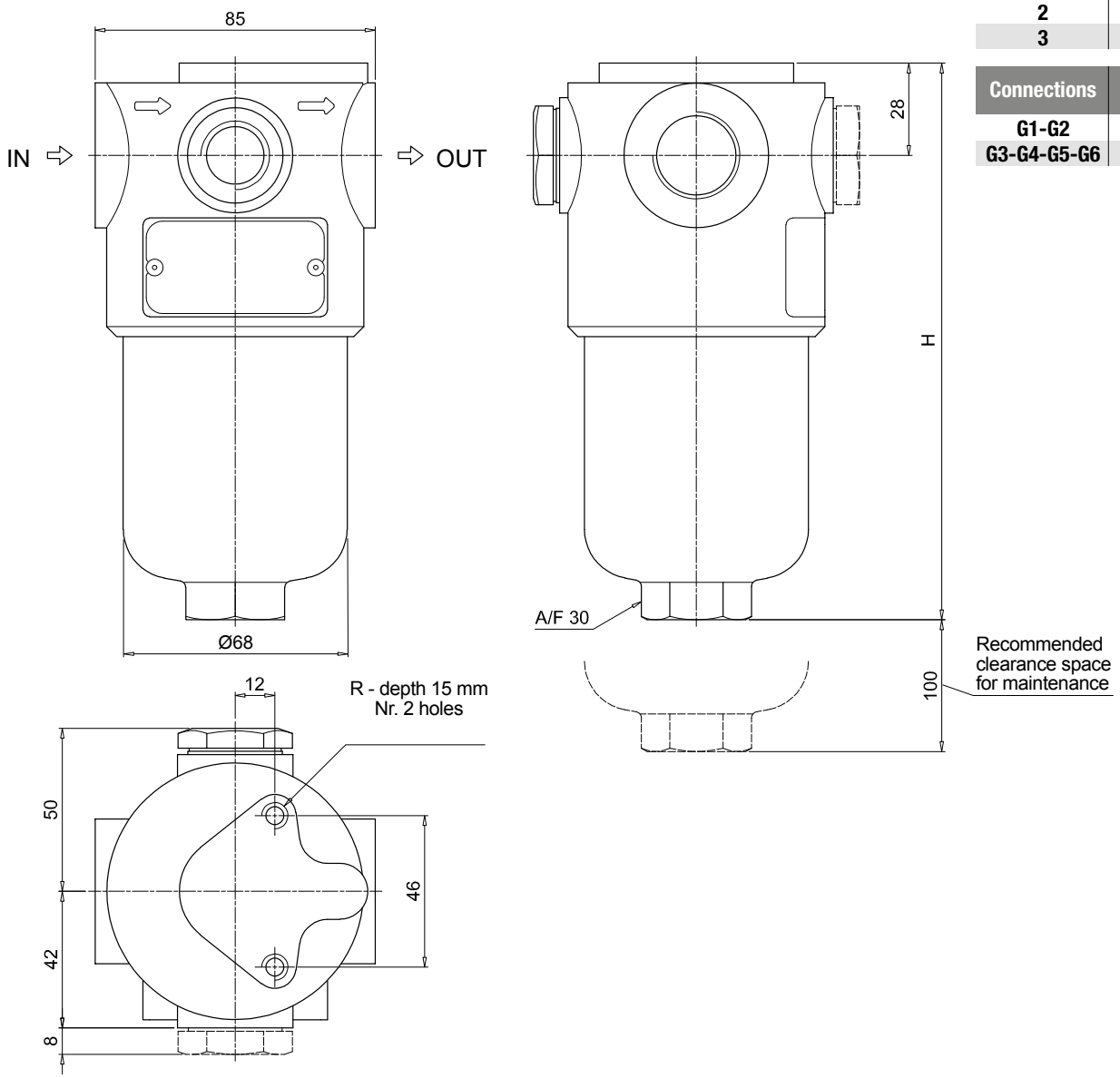

FMP065	
Filter length	**H [mm]**
1	169
2	200
3	302

Connections	**R**
G1-G2	M8
G3-G4-G5-G6	5/16" UNC

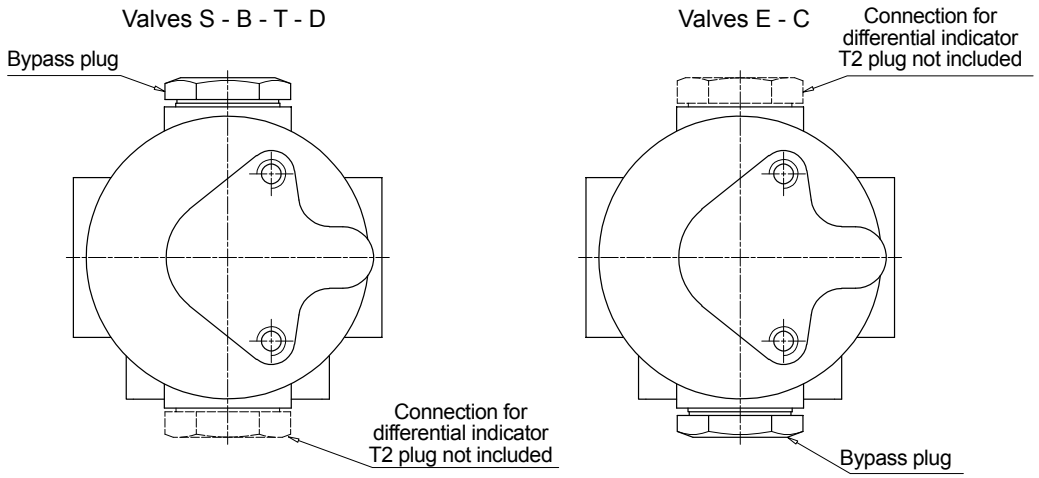

Dimensions

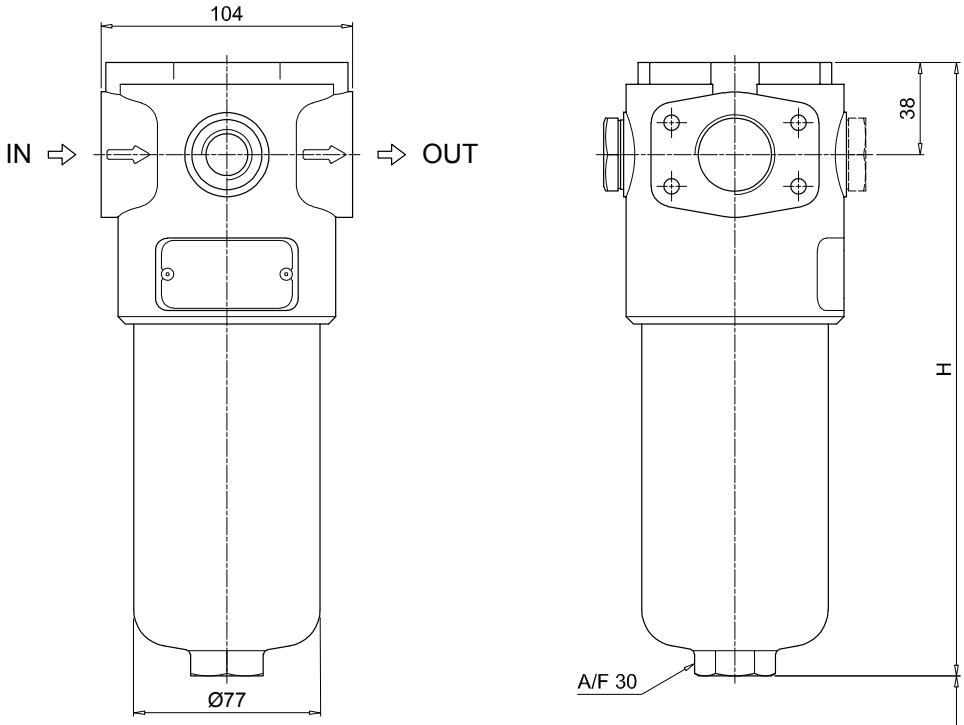

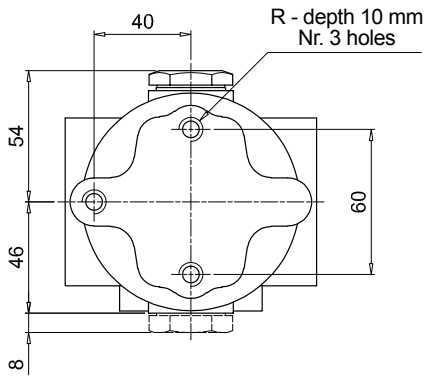

Valves S - B - T - D

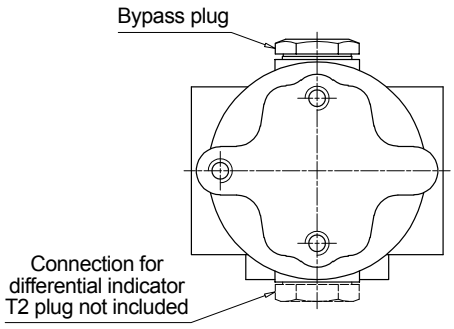

Valves E - C

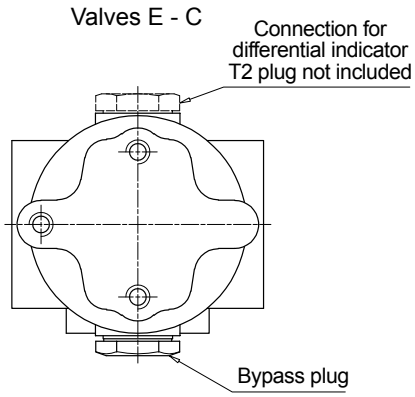

FMP135	
Filter length	**H [mm]**
1	221
2	334
3	409

Connections	R
G1-G2	M10
G3-G4-G5-G6	3/8" UNC
F1-F2	M10
F3-F4	3/8" UNC

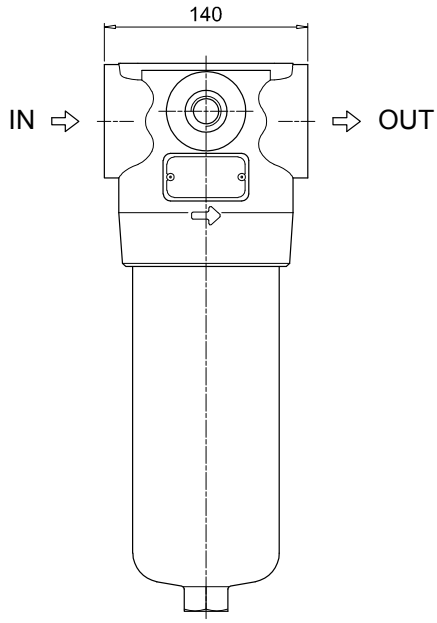

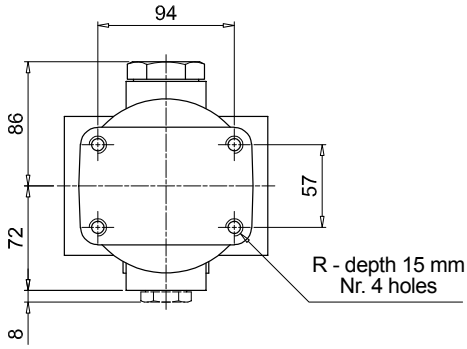

Length 1 - 2 - 3

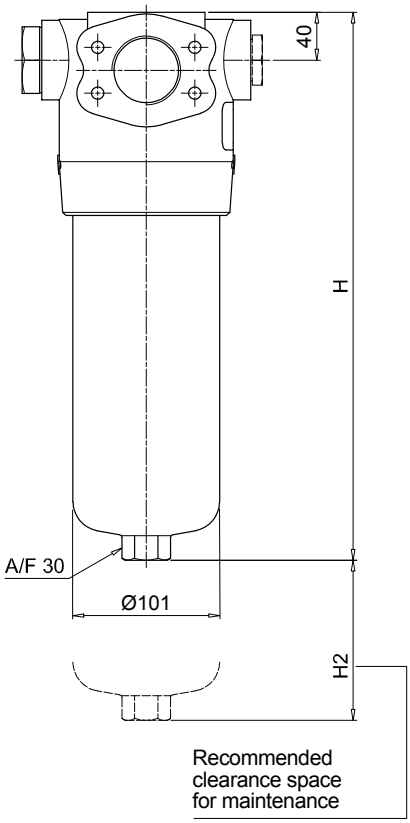

Length 4

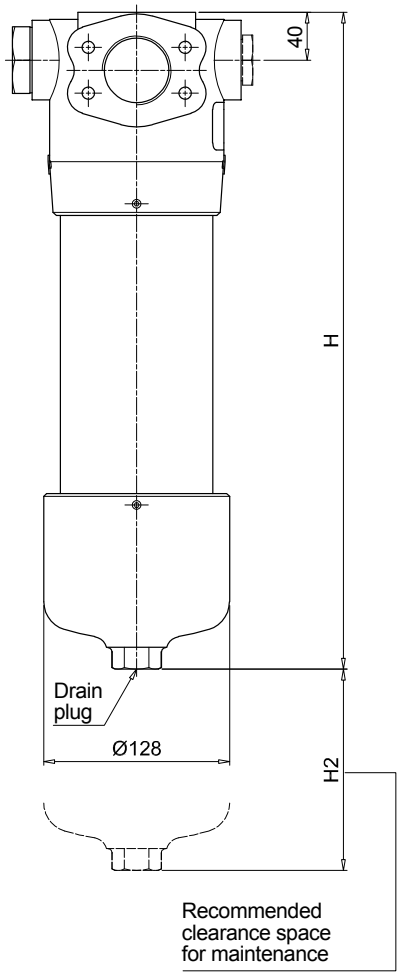

Valves S - B - T - D

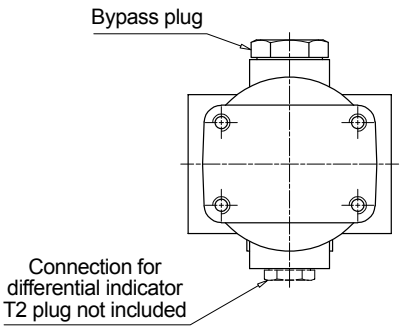

Valves E - C

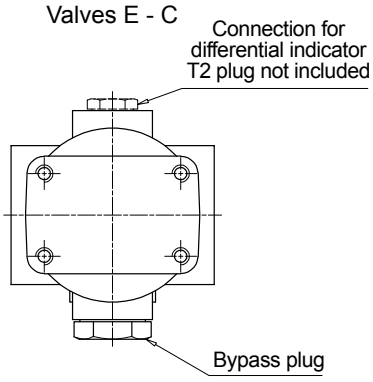

FMP320

Filter length	H [mm]	H2 [mm] Execution P01	H2 [mm] Execution P02
1	263	150	-
2	386	150	-
3	518	150	-
4	671	150	550

Connections	R
G1-G2	M12
G3-G4-G5-G6	1/2" UNC
F1-F2	M12
F3-F4	1/2" UNC

Order number for spare parts

FMP 065 - 135 - 320

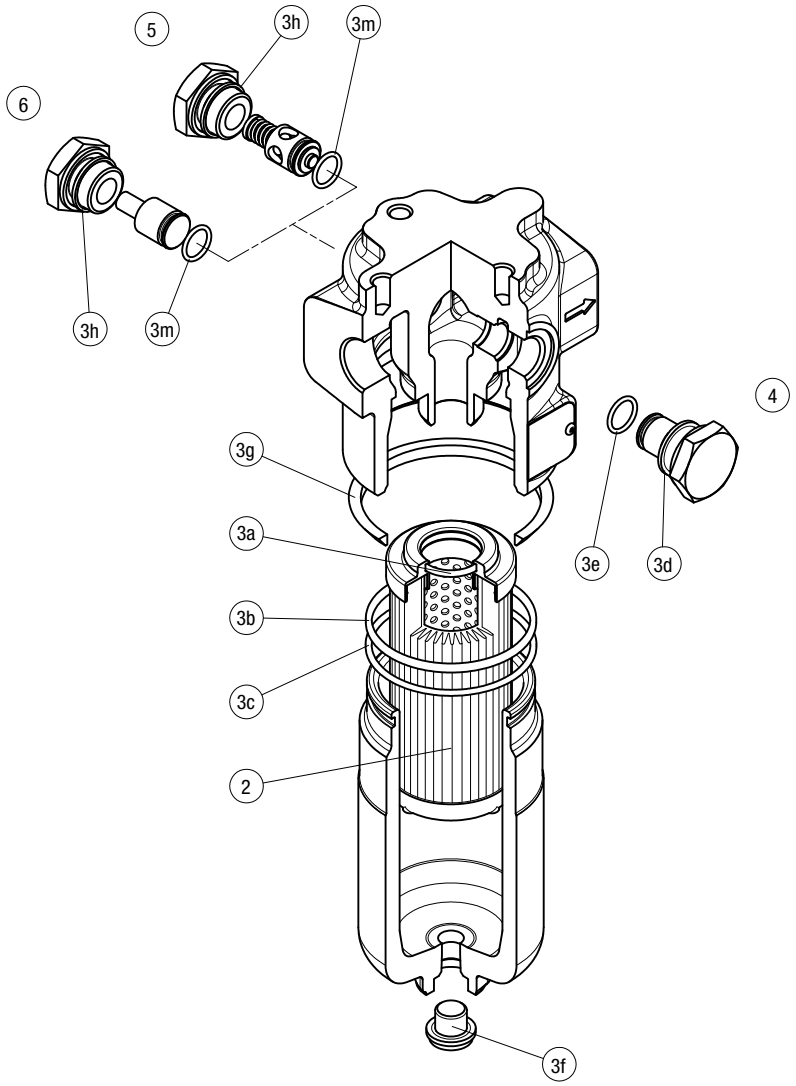

Item:	Q.ty: 1 pc. 2	Q.ty: 1 pc. 3 (3a ÷ 3m)		Q.ty: 1 pc. 4		Q.ty: 1 pc. 5		Q.ty: 1 pc. 6	
Filter series	**Filter element**	**Seal Kit code number NBR**	**FPM**	**Indicator connection plug NBR**	**FPM**	**Bypass assembly NBR**	**FPM**	**Non-bypass assembly NBR**	**FPM**
FMP 065	See order table	02050267	02050278	T2H	T2V	02001312	02001385	02001314	02001386
FMP 135		02050293	02050294			02001312	02001385	02001314	02001386
FMP 320		02050274	02050285			02001396	02001397	02001398	02001399

FHP series

Maximum working pressure up to 42 MPa (420 bar) - Flow rate up to 630 l/min

FHP GENERAL INFORMATION

Description

High Pressure filters

In-line
Maximum working pressure up to 42 MPa (420 bar)
Flow rate up to 630 l/min

FHP is a range of versatile high pressure filter for protection of sensitive components in high pressure hydraulic systems in the industrial equipment.
They are directly connected to the lines of the system through the hydraulic fittings.

Available features:

- Female threaded connections up to 1 1/2" and flanged connections up to 2", for a maximum return flow rate of 750 l/min
- Fine filtration rating, to get a good cleanliness level into the system
- Bypass valve, to relieve excessive pressure drop across the filter media
- Check valve, to protect the system against reverse flow
- Reverse flow valve, to allow bidirectional flow through the filter housing. The back flow is not filtered. The filter requires the use of internal check valves to direct the flow through the element in one direction and around the element in the other
- Low collapse filter element "N", for use with filters provided with bypass valve
- High collapse filter element "H", for use with filters not provided with bypass valve
- Low collapse filter element with external support "R", for filter element protection against the back pressure caused by the check valve or the reverse flow in filters provided with the bypass valve
- High collapse filter element with external support "S", for filter element protection against the back pressure caused by the check valve or the reverse flow in filters not provided with the bypass valve
- Visual, electrical and electronic differential clogging indicators

Common applications:

Delivery lines, in any high pressure industrial equipment or mobile machines

Technical data

Filter housing materials

- Head: Phosphatized cast iron

- Housing: Phosphatized steel

- Bypass valve
  AISI 316L: FHP 010 - 011
  Brass: FHP 065 - 135
  Brass / AISI 304: FHP 350
  Steel: FHP 500

- Reverse Flow
  Steel: FHP 350 - FHP 500

- Check valve: Steel

Pressure

- Test pressure: 63 MPa (630 bar)
- Burst pressure: 126 MPa (1260 bar)
- Pulse pressure fatigue test: 1 000 000 cycles with pressure from 0 to 42 MPa (420 bar)

Bypass valve

- Opening pressure 600 kPa (6 bar) ±10%
- Other opening pressures on request.

Δp element type

- Microfibre filter elements - series N: 20 bar
- Microfibre filter elements - series R: 20 bar (not available for FHP 010-011 and FHP 500)
- Microfibre filter elements - series H: 210 bar
- Microfibre filter elements - series S: 210 bar (only for FHP 500)
- Wire mesh filter elements - series N: 20 bar
- Fluid flow through the filter element from OUT to IN

Seals

- Standard NBR series A
- Optional FPM series V

Temperature

From -25 °C to +110 °C

Connections

FHP 010 - 065 - 135 - 350 - 500:
In-line Inlet/Outlet

FHP 011:
90° Inlet/Outlet

Note

FHP filters are provided for vertical mounting

Weights [kg] and volumes [dm³]

Filter series	Weights [kg]						Volumes [dm³]					
	Length	1	2	3	4	5	Length	1	2	3	4	5
FHP 010 - 011		2.05	2.18	2.64	3.13	-		0.10	0.12	0.15	0.20	-
FHP 065		4.26	4.62	5.83	-	-		0.25	0.30	0.50	-	-
FHP 135		7.11	8.71	9.76	-	-		0.43	0.76	0.97	-	-
FHP 350		13.95	16.08	18.37	20.85	-		1.00	1.72	2.49	3.32	-
FHP 500		27.00	31.17	34.69	46.70	52.5		1.71	2.43	3.04	5.18	6.51

FILTER ASSEMBLY SIZING
Flow rates [l/min]

		Filter element design - H Series					Filter element design - N Series					
Filter series	Length	A03	A06	A10	A16	A25	A03	A06	A10	A16	A25	M25
FHP 010	**1**	3	5	6	7	8	4	6	8	9	10	37
	2	5	7	13	16	22	6	8	16	19	24	40
	3	10	13	22	25	30	11	14	23	26	31	41
	4	12	15	25	27	32	16	19	27	30	33	41
FHP 011	**1**	3	5	6	7	9	4	6	8	9	11	47
	2	5	7	14	17	24	7	9	17	21	28	52
	3	11	14	25	29	36	11	14	26	30	37	53
	4	12	16	28	32	38	17	21	32	36	40	54
FHP 065	**1**	24	25	50	59	84	25	33	56	63	90	142
	2	33	38	68	77	98	34	52	72	79	106	143
	3	61	70	100	107	123	61	73	101	108	125	147
FHP 135	**1**	49	55	95	98	147	67	72	115	122	159	184
	2	89	106	129	131	163	105	111	140	142	192	209
	3	120	132	158	166	180	141	143	176	179	193	211
FHP 350	**1**	108	115	188	197	301	127	140	234	282	343	451
	2	196	225	317	323	396	256	278	394	415	465	480
	3	266	310	384	392	440	331	370	450	466	475	490
	4	308	333	391	398	445	369	393	456	474	495	503
FHP 500	**1**	144	157	265	268	355	269	305	390	406	444	612
	2	232	262	350	363	398	321	357	433	441	484	619
	3	293	301	398	408	455	396	416	497	499	537	622
	4	336	377	452	455	507	430	475	516	524	545	626
	5	420	428	494	500	544	475	493	535	545	569	627

Maximum flow rate for a complete pressure filter with a pressure drop Δp = 1.5 bar.
The reference fluid has a kinematic viscosity of 30 mm^2/s (cSt) and a density of 0.86 kg/dm^3.
For different pressure drop or fluid viscosity we recommend to use our selection software available on www.mpfiltri.com.
You can also calculate the right size using the formulas present on the FILTER SIZING paragraph at the beginning of the full catalogue or at the beginning of the filter family brochure.
Please, contact our Sales Department for further additional information.

Hydraulic symbols

Filter series	Style S	Style B	Style T	Style D	Style V	Style Z
FHP 010 - 011	•	•			•	•
FHP 065	•	•	•			
FHP 135	•	•	•			
FHP 350	•	•	•	•	•	•
FHP 500	•	•	•	•	•	•

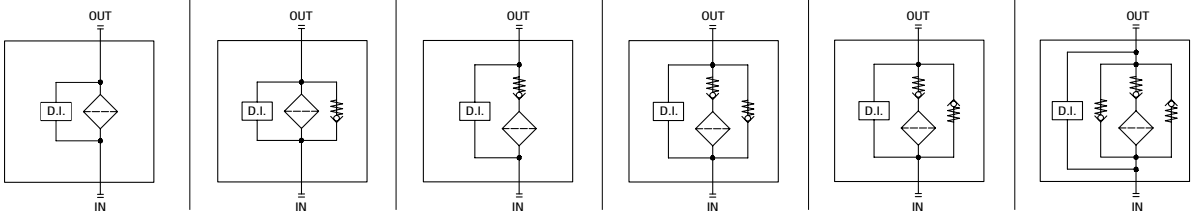

Pressure drop

Filter housings Δp pressure drop

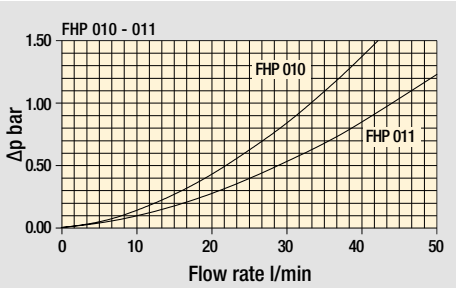

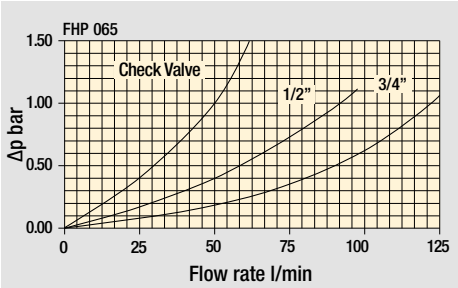

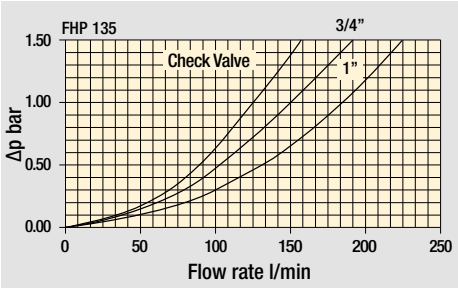

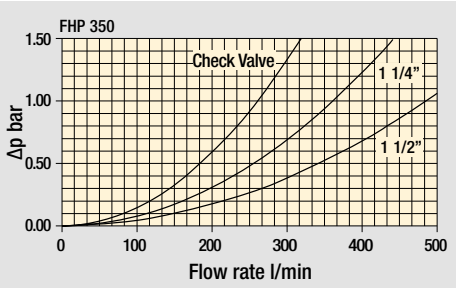

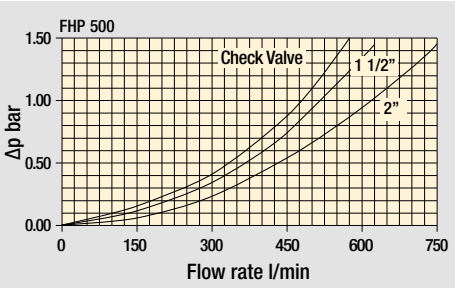

Bypass valve pressure drop

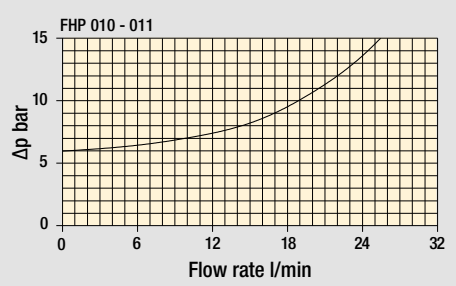

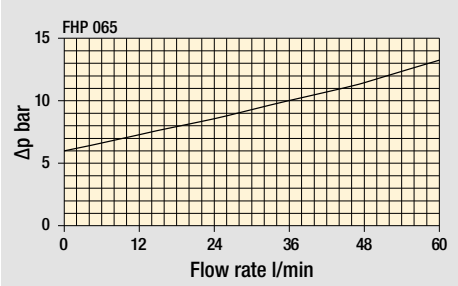

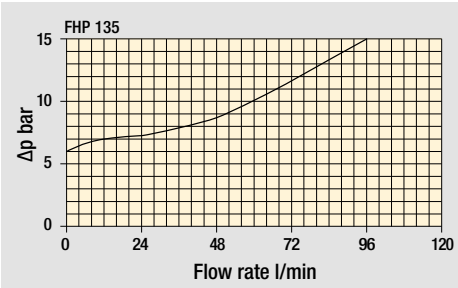

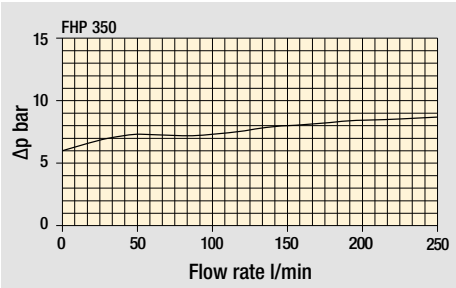

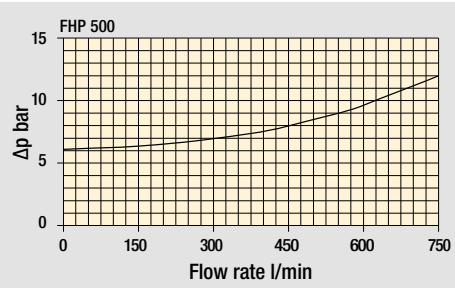

Valves

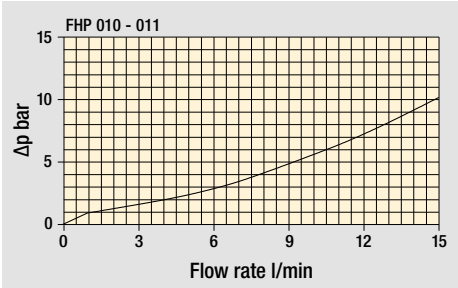

Filter housing with check valve

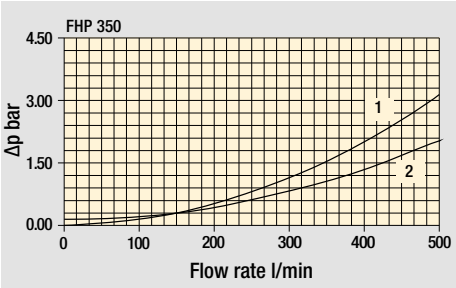

Pressure drop with reverse flow valve in
1 - Filtering direction
2 - Opposite direction

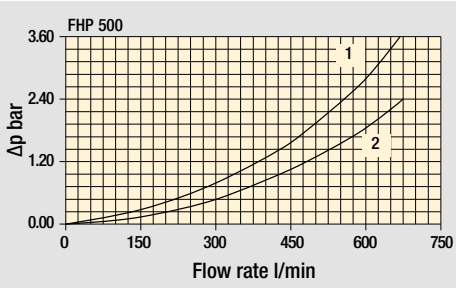

Pressure drop with reverse flow valve in
1 - Opposite direction
2 - Filtering direction

The curves are plotted using mineral oil with density of 0.86 kg/dm^3 in compliance with ISO 3968. Δp varies proportionally with density.

FHP FHP010 - FHP011

Designation & Ordering code

COMPLETE FILTER

Configuration example: FHP010 | 2 | B | A | B | 2 | A03 | N | P01

Series and size

FHP010 | **FHP011**

Length

1 | **2** | **3** | **4**

Valves

S	Without bypass
B	With bypass 6 bar
V	With reverse flow, without bypass
Z	With reverse flow, with bypass 6 bar

Seals

A	NBR
V	FPM

Connections

A	G 1/4”
B	1/4” NPT
C	SAE 5 - 1/2” - 20 UNF
D	G 3/8”
E	3/8” NPT
F	SAE 6 - 9/16” - 18 UNF

Connection for differential indicator

1	Without
2	With connection

Filtration rating (filter media)

A03	Inorganic microfiber	3 µm	**A16**	Inorganic microfiber	16 µm
A06	Inorganic microfiber	6 µm	**A25**	Inorganic microfiber	25 µm
A10	Inorganic microfiber	10 µm	**M25**	Wire mesh	25 µm

Element Δp		Valves S	Valves B	Valves V	Valves Z
N	20 bar		•		•
H	210 bar	•		•	

Execution	
P01	MP Filtri standard
Pxx	Customized

FILTER ELEMENT

Configuration example: HP011 | 2 | A03 | A | N | P01

Element series and size

HP011

Element length

1 | **2** | **3** | **4**

Filtration rating (filter media)

A03	Inorganic microfiber	3 µm	**A16**	Inorganic microfiber	16 µm
A06	Inorganic microfiber	6 µm	**A25**	Inorganic microfiber	25 µm
A10	Inorganic microfiber	10 µm	**M25**	Wire mesh	25 µm

Seals

A	NBR
V	FPM

Element Δp	
N	20 bar
H	210 bar

Execution	
P01	MP Filtri standard
Pxx	Customized

ACCESSORIES

Differential indicators		page
DEA	Electrical differential indicator	577
DEH	Hazardous area electronic differential indicator	577-578
DEM	Electrical differential indicator	578-579
DLA	Electrical / visual differential indicator	579-580
DLE	Electrical / visual differential indicator	580
DTA	Electronic differential indicator	581
DVA	Visual differential indicator	581
DVM	Visual differential indicator	581

Additional features		page
T2	Plug	582

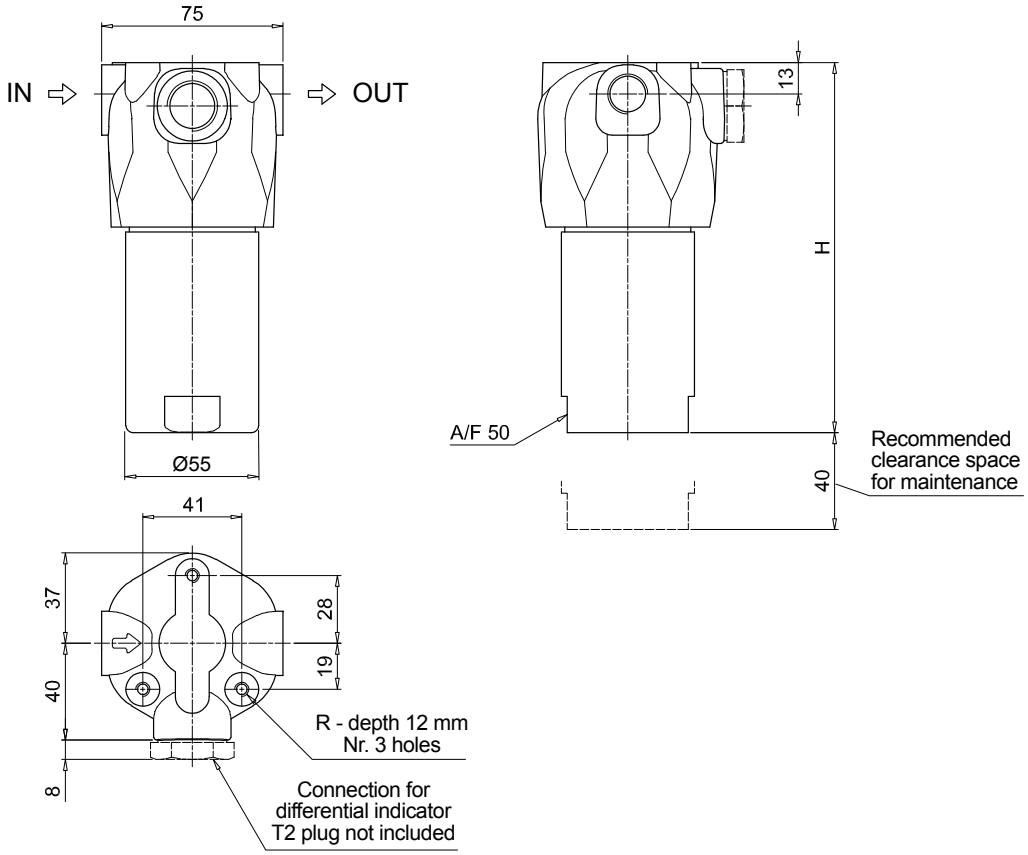

FHP010	
Filter length	**H [mm]**
1	92
2	103
3	153
4	203

Connections	R
A	M6
B - C	1/4" UNC
D	M6
E - F	1/4" UNC

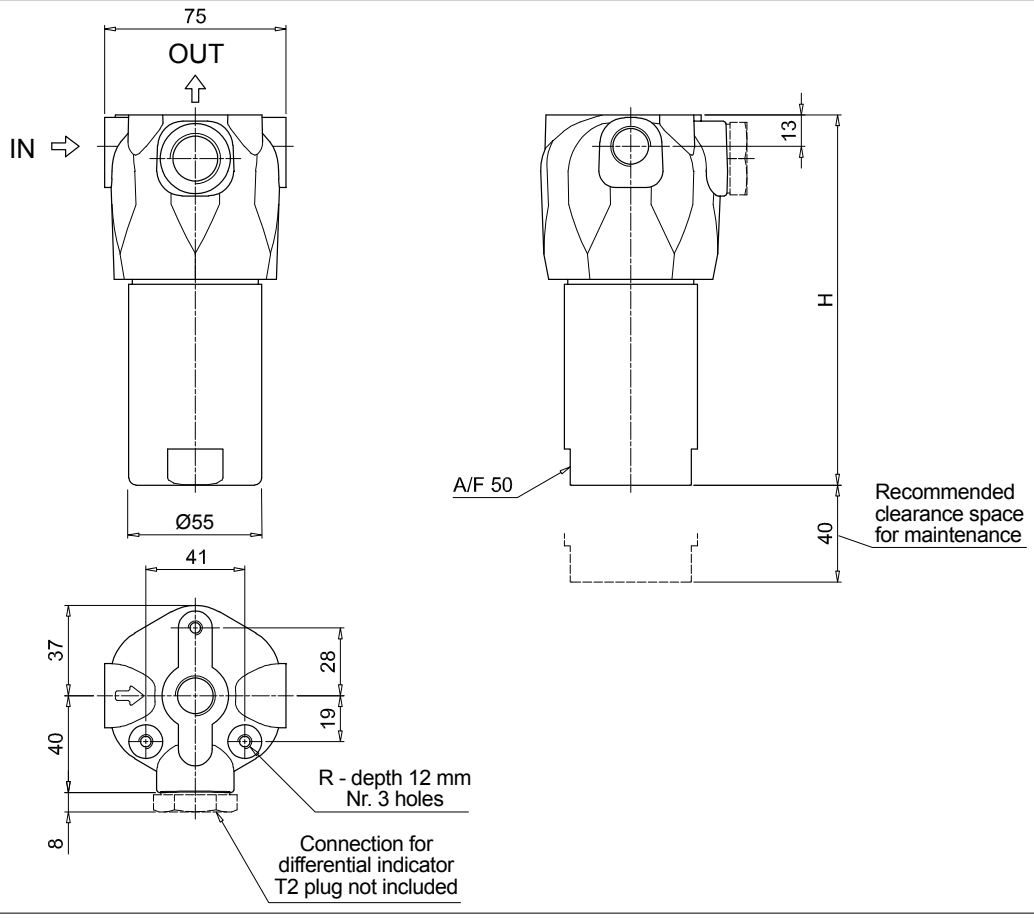

FHP011	
Filter length	**H [mm]**
1	92
2	103
3	153
4	203

Connections	R
A	M6
B - C	1/4" UNC
D	M6
E - F	1/4" UNC

FHP FHP065 - FHP135

Designation & Ordering code

COMPLETE FILTER

Configuration example: FHP135 | 2 | B | A | G3 | A06 | S | P01

Series and size

FHP065 | **FHP135**

Length

1
2
3

Valves

S Without bypass
B With bypass 6 bar
T With check valve, without bypass

Seals

A NBR
V FPM

Connections	FHP065	FHP135
G1	G 1/2”	G 3/4”
G2	G 3/4”	G 1”
G3	1/2” NPT	3/4” NPT
G4	3/4” NPT	1” NPT
G5	SAE 8 - 3/4” - 16 UNF	SAE 12 - 1 1/16” - 12 UN
G6	SAE 12 - 1 1/16” - 12 UN	SAE 16 - 1 5/16” - 12 UN
F1	-	3/4” SAE 3000 psi/M
F2	-	1” SAE 3000 psi/M
F3	-	3/4” SAE 3000 psi/UNC
F4	-	1” SAE 3000 psi/UNC
F5	-	3/4” SAE 6000 psi/M
F6	-	3/4” SAE 6000 psi/UNC

Filtration rating (filter media)

A03	Inorganic microfiber	3 µm
A06	Inorganic microfiber	6 µm
A10	Inorganic microfiber	10 µm
A16	Inorganic microfiber	16 µm
A25	Inorganic microfiber	25 µm
M25	Wire mesh	25 µm

Valves

Element Δp		S	B	T	D	V	Z
N	20 bar		•				
R	20 bar				•		•
H	210 bar	•					
S	210 bar			•		•	

Execution

P01 MP Filtri standard
Pxx Customized

FILTER ELEMENT

Configuration example: HP135 | 2 | A06 | A | S | P01

Element series and size

HP065 | **HP135**

Element length

1
2
3

Filtration rating (filter media)

A03	Inorganic microfiber	3 µm	**A16**	Inorganic microfiber	16 µm
A06	Inorganic microfiber	6 µm	**A25**	Inorganic microfiber	25 µm
A10	Inorganic microfiber	10 µm	**M25**	Wire mesh	25 µm

Seals

A NBR
V FPM

Element Δp

N 20 bar
R 20 bar
H 210 bar
S 210 bar

Execution

P01 MP Filtri standard
Pxx Customized

ACCESSORIES

Differential indicators		page
DEA	Electrical differential indicator	577
DEH	Hazardous area electronic differential indicator	577-578
DEM	Electrical differential indicator	578-579
DLA	Electrical / visual differential indicator	579-580
DLE	Electrical / visual differential indicator	580
DTA	Electronic differential indicator	581
DVA	Visual differential indicator	581
DVM	Visual differential indicator	581

Additional features		page
T2	Plug	582

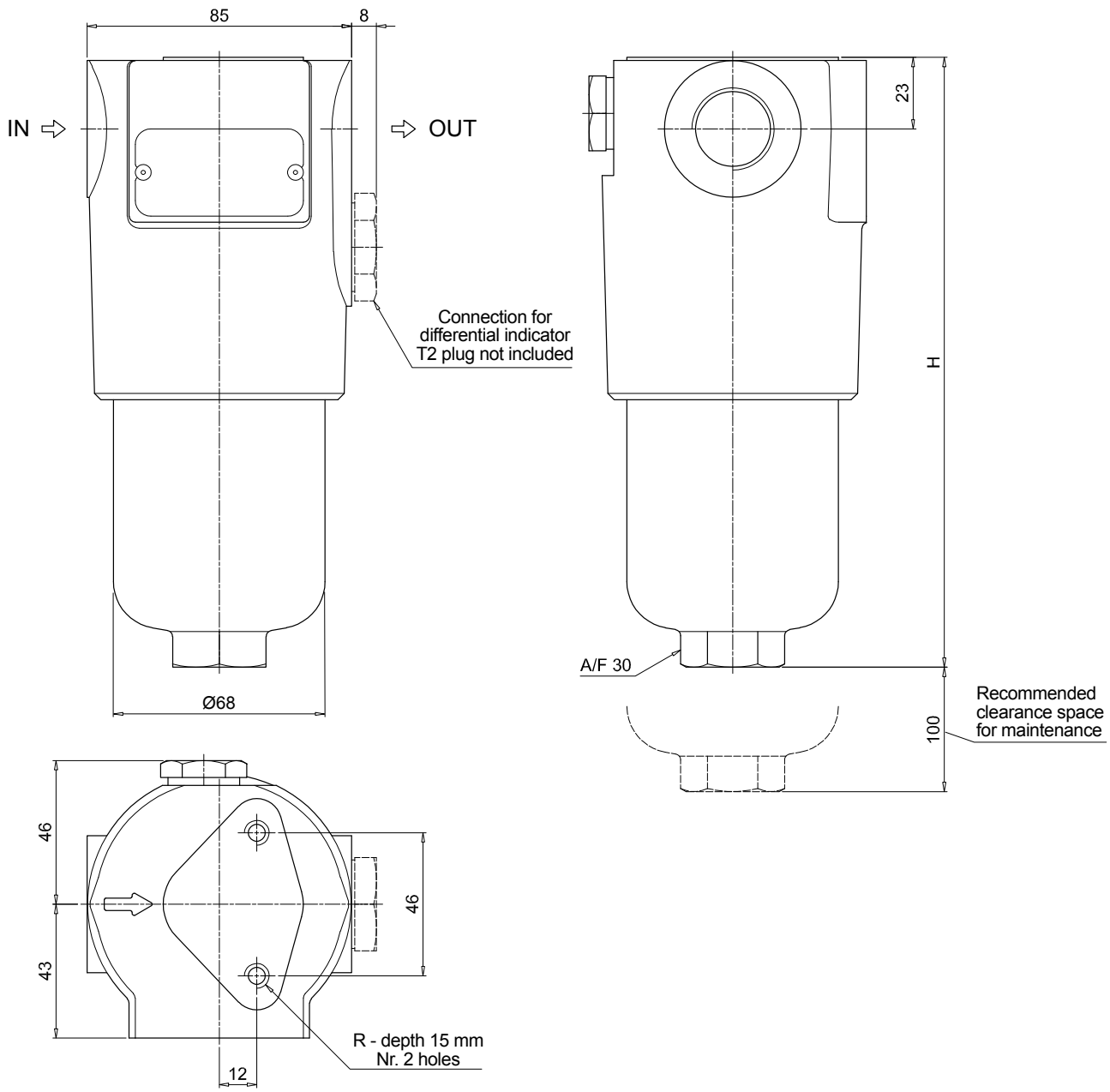

FHP065	
Filter length	**H [mm]**
1	196
2	227
3	329

Connections	R
G1-G2	M8
G3-G4-G5-G6	5/16" UNC

Dimensions

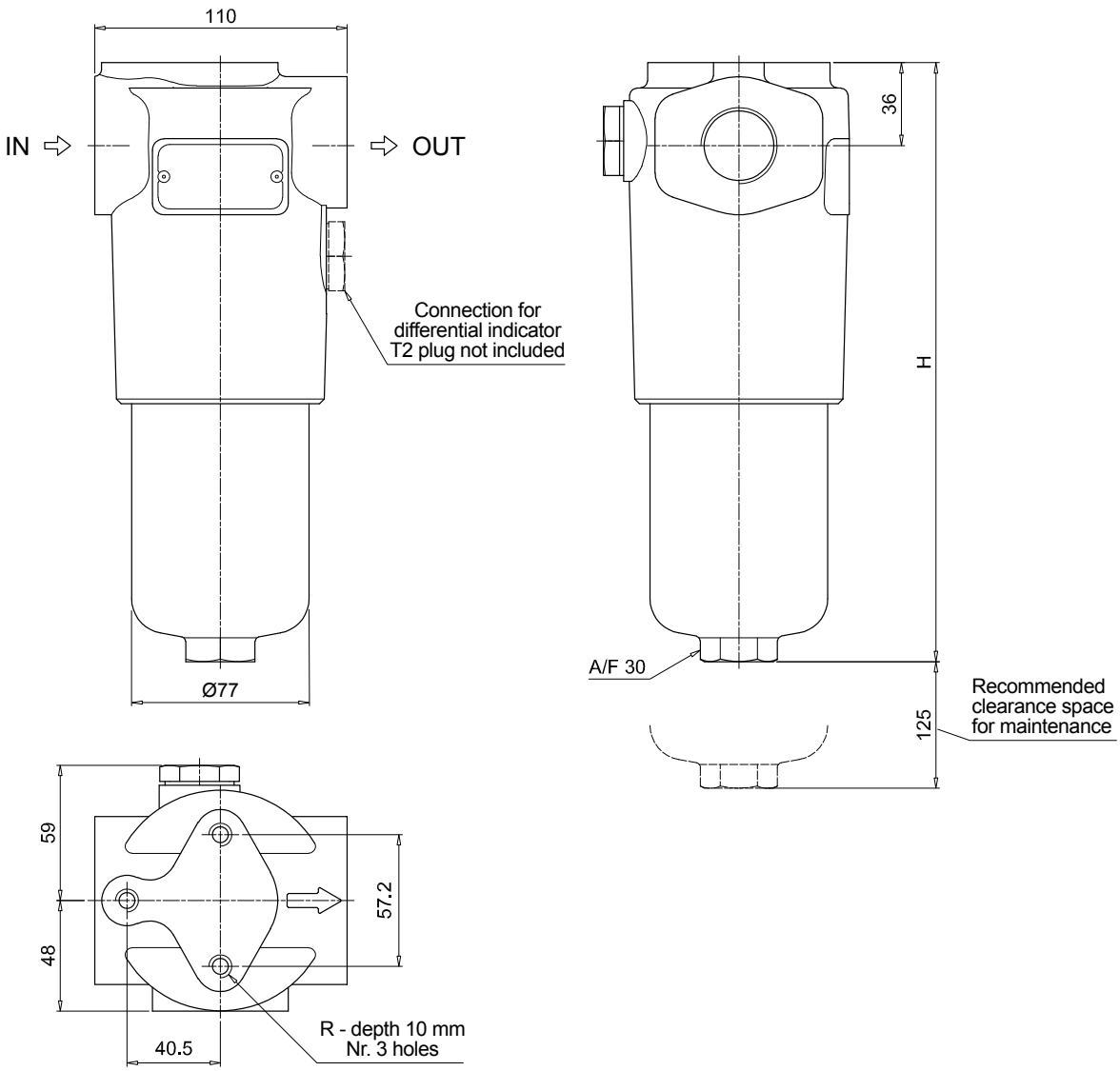

FHP135	
Filter length	**H [mm]**
1	260
2	373
3	448

Connections	R
G1-G2	M10
G3-G4-G5-G6	3/8" UNC
F1-F2	M10
F3-F4	3/8" UNC
F5	M10
F6	3/8" UNC

Designation & Ordering code

COMPLETE FILTER

Configuration example: FHP350 | 4 | B | A | D | 2 | A06 | N | P01

Series and size
FHP350

Length
1 | 2 | 3 | 4 |

Valves
S Without bypass
B With bypass 6 bar
T With check valve, without bypass
D With check valve, with bypass 6 bar
V With reverse flow, without bypass
Z With reverse flow, with bypass 6 bar

Seals
A NBR
V FPM

Connections
A G 1 1/2”
B 1 1/2” NPT
C SAE 24 - 1 7/8” - 12 UN
D 1 1/2” SAE 3000 psi/M + G 1 1/4”
E 1 1/2” SAE 3000 psi/UNC + 1 1/4” NPT
F 1 1/2” SAE 3000 psi/UNC + SAE 20 - 1 5/8” - 12 UN
G 1 1/4” SAE 3000 psi/M
H 1 1/4” SAE 3000 psi/UNC
I 1 1/4” SAE 6000 psi/M
L 1 1/4” SAE 6000 psi/UNC

Connection for differential indicator
2 With connection

Filtration rating (filter media)

A03	Inorganic microfiber	3 µm
A06	Inorganic microfiber	6 µm
A10	Inorganic microfiber	10 µm
A16	Inorganic microfiber	16 µm
A25	Inorganic microfiber	25 µm
M25	Wire mesh	25 µm

Element Δp		Valves S	B	T	D	V	Z
N	20 bar		•				
R	20 bar				•		•
H	210 bar	•					
S	210 bar			•		•	

Execution		Filter length 1	2	3	4
P01	MP Filtri standard	•	•	•	•
P02	Maintenance from the bottom of the housing				•
Pxx	Customized				

FILTER ELEMENT

Configuration example: HP320 | 4 | A06 | A | N | P01

Element series and size
HP320

Element length
1 | 2 | 3 | 4 |

Filtration rating (filter media)

A03	Inorganic microfiber	3 µm
A06	Inorganic microfiber	6 µm
A10	Inorganic microfiber	10 µm
A16	Inorganic microfiber	16 µm
A25	Inorganic microfiber	25 µm
M25	Wire mesh	25 µm

Seals
A NBR
V FPM

Element Δp
N 20 bar
R 20 bar
H 210 bar
S 210 bar

Execution
P01 MP Filtri standard
Pxx Customized

ACCESSORIES

Differential indicators		page
DEA	Electrical differential indicator	577
DEH	Hazardous area electronic differential indicator	577-578
DEM	Electrical differential indicator	578-579
DLA	Electrical / visual differential indicator	579-580
DLE	Electrical / visual differential indicator	580
DTA	Electronic differential indicator	581
DVA	Visual differential indicator	581
DVM	Visual differential indicator	581

Additional features		page
T2	Plug	582

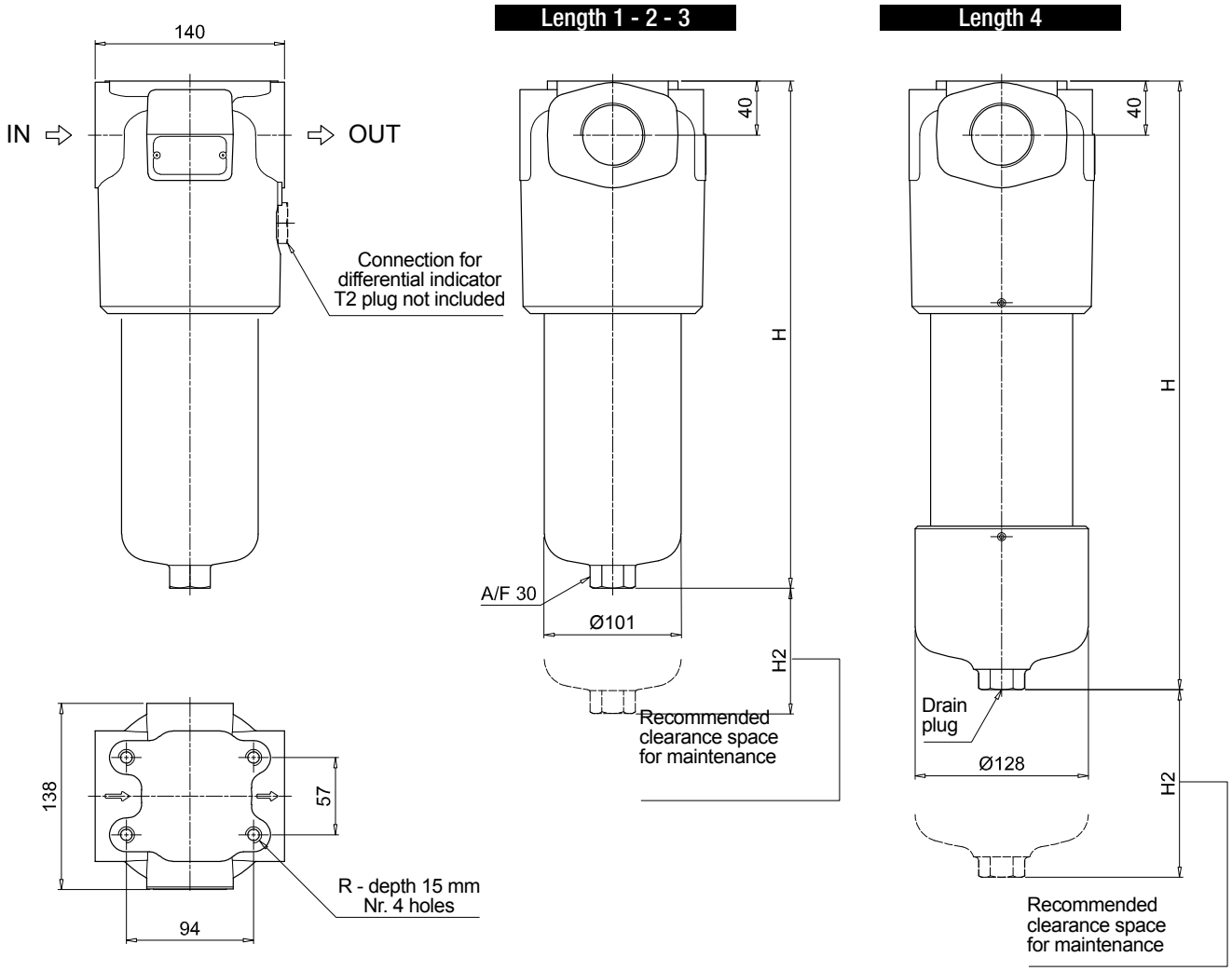

FHP350			
Filter length	H [mm]	H2 [mm] Execution P01	H2 [mm] Execution P02
1	295	150	-
2	418	150	-
3	550	150	-
4	703	150	550

Connections	R
A	M12
B - C	1/2" UNC
D	M12
E - F	1/2" UNC
G	M12
H	1/2" UNC
I	M12
L	1/2" UNC

FHP FHP500

Designation & Ordering code

COMPLETE FILTER

Configuration example: FHP500 | 4 | V | A | F1 | A06 | S | P01

Series and size

FHP500

Length

1 | 2 | 3 | 4 | 5 |

Valves

S	Without bypass
B	With bypass 6 bar
T	With check valve, without bypass
D	With check valve, with bypass 6 bar
V	With reverse flow, without bypass
Z	With reverse flow, with bypass 6 bar

Seals

A	NBR
V	FPM

Connections

F1	1 1/2” SAE 3000 psi/M
F2	1 1/2” SAE 3000 psi/UNC
F3	2” SAE 3000 psi/M
F4	2” SAE 3000 psi/UNC + 1 1/2” NPT
F5	1 1/2” SAE 6000 psi/M
F6	1 1/2” SAE 6000 psi/UNC
F7	2” SAE 6000 psi/M + G 1 1/2”
F8	2” SAE 6000 psi/UNC + SAE 24 - 1 7/8” - 12 UN

Filtration rating (filter media)

A03	Inorganic microfiber	3 µm
A06	Inorganic microfiber	6 µm
A10	Inorganic microfiber	10 µm
A16	Inorganic microfiber	16 µm
A25	Inorganic microfiber	25 µm
M25	Wire mesh	25 µm

Element Δp		Valves S	B	T	D	V	Z
N	20 bar		•				
R	20 bar				•		•
S	210 bar	•		•		•	

Execution		Filter length 1	2	3	4	5
P01	MP Filtri standard	•	•	•	•	•
P02	Maintenance from the bottom of the housing				•	•
P03	Drain plug	•	•			
Pxx	Customized	•	•	•	•	•

FILTER ELEMENT

Configuration example: HP500 | 4 | A06 | A | S | P01

Element series and size

HP500

Element length

1 | 2 | 3 | 4 | 5 |

Filtration rating (filter media)

A03	Inorganic microfiber	3 µm
A06	Inorganic microfiber	6 µm
A10	Inorganic microfiber	10 µm
A16	Inorganic microfiber	16 µm
A25	Inorganic microfiber	25 µm
M25	Wire mesh	25 µm

Seals

A	NBR
V	FPM

Element Δp

N	20 bar
R	20 bar
S	210 bar

Execution

P01	MP Filtri standard
Pxx	Customized

ACCESSORIES

Differential indicators		page
DEA	Electrical differential indicator	577
DEH	Hazardous area electronic differential indicator	577-578
DEM	Electrical differential indicator	578-579
DLA	Electrical / visual differential indicator	579-580
DLE	Electrical / visual differential indicator	580
DTA	Electronic differential indicator	581
DVA	Visual differential indicator	581
DVM	Visual differential indicator	581

Additional features		page
T2	Plug	582

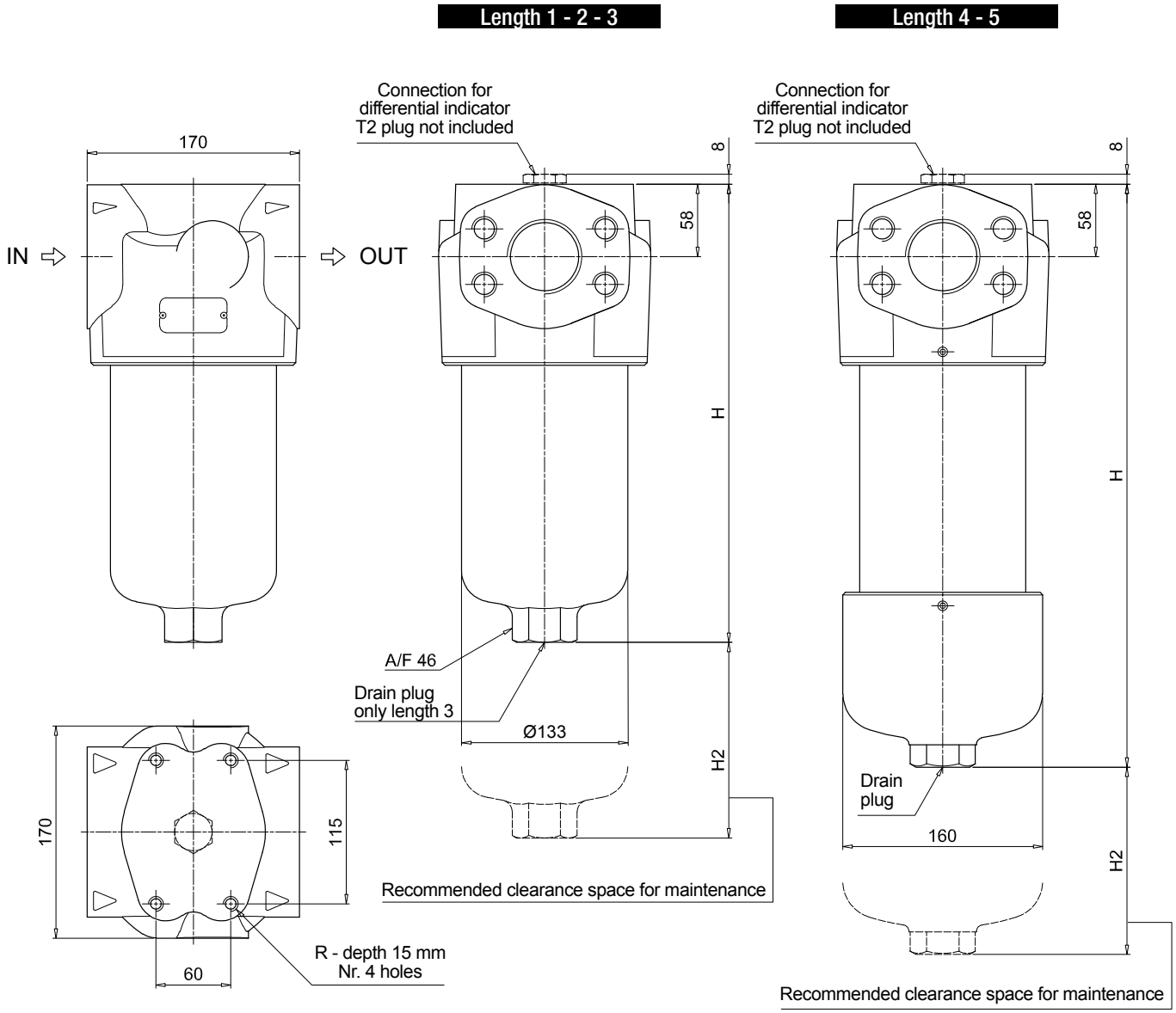

Valves S - B - T - D

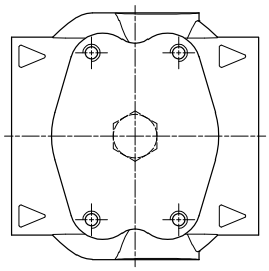

Valves V - Z

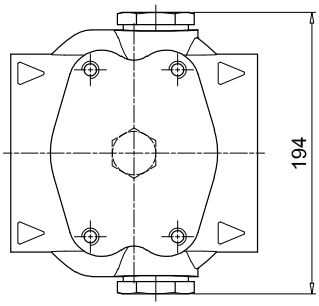

FHP500

Filter length	H [mm]	H2 [mm] Execution P01	H2 [mm] Execution P02
1	330	150	-
2	420	150	-
3	496	150	-
4	654	150	480
5	820	150	650

Connections	R
F1	M12
F2	1/2" UNC
F3	M12
F4	1/2" UNC
F5	M12
F6	1/2" UNC
F7	M12
F8	1/2" UNC

Order number for spare parts

FHP 010 - 011

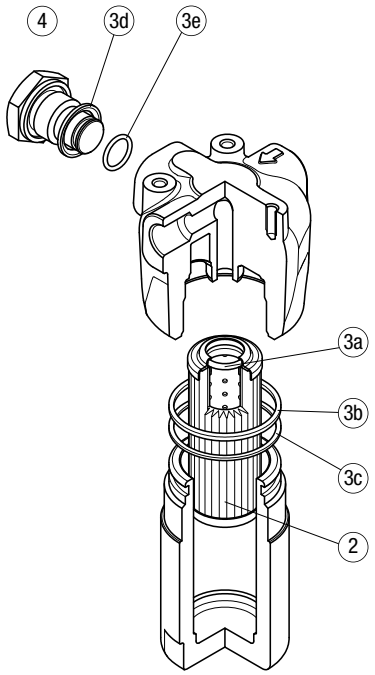

Q.ty:
nr. 0 pcs. for version 1 (without indicator port)

nr. 1 pc. for version 2 (with indicator port)

Item:	Q.ty: 1 pc. 2	Q.ty: 1 pc. 3 (3a ÷ 3e)		4	
Filter series	Filter element	Seal Kit code number NBR	Seal Kit code number FPM	Indicator connection plug NBR	Indicator connection plug FPM
FHP 010-011	See order table	02050501	02050492	T2H	T2V

FHP 065

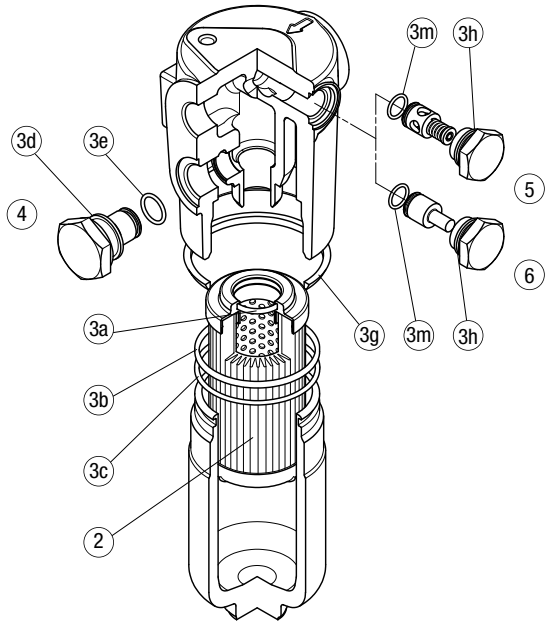

FHP 135

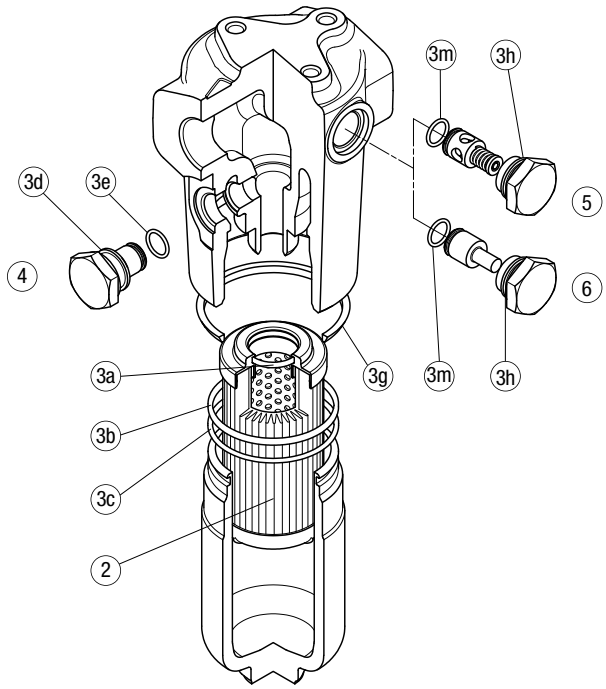

Item:	Q.ty: 1 pc. 2	Q.ty: 1 pc. 3 (3a ÷ 3m)		Q.ty: 1 pc. 4		Q.ty: 1 pc. 5		Q.ty: 1 pc. 6	
Filter series	Filter element	Seal Kit code number NBR	Seal Kit code number FPM	Indicator connection plug NBR	Indicator connection plug FPM	Bypass assembly NBR	Bypass assembly FPM	Non-bypass assembly NBR	Non-bypass assembly FPM
FHP 065	See order table	02050265	02050276	T2H	T2V	02001116	02001136	02001142	02001139
FHP 135		02050269	02050280			02001117	02001137	02001143	02001392

Order number for spare parts

FHP 350

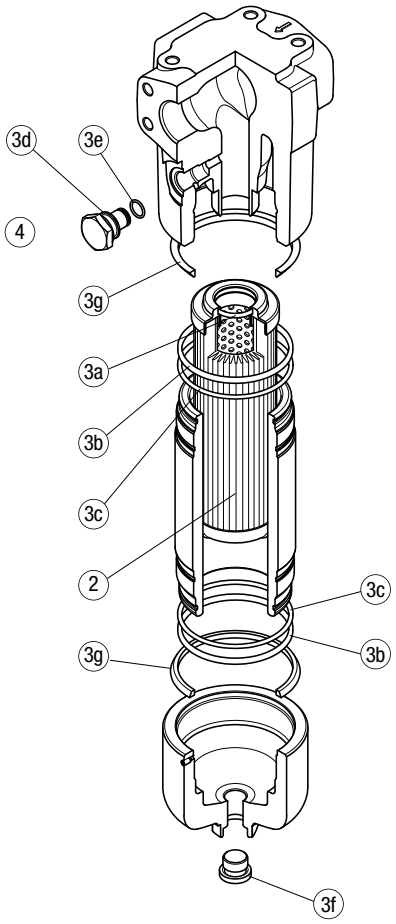

FHP 500

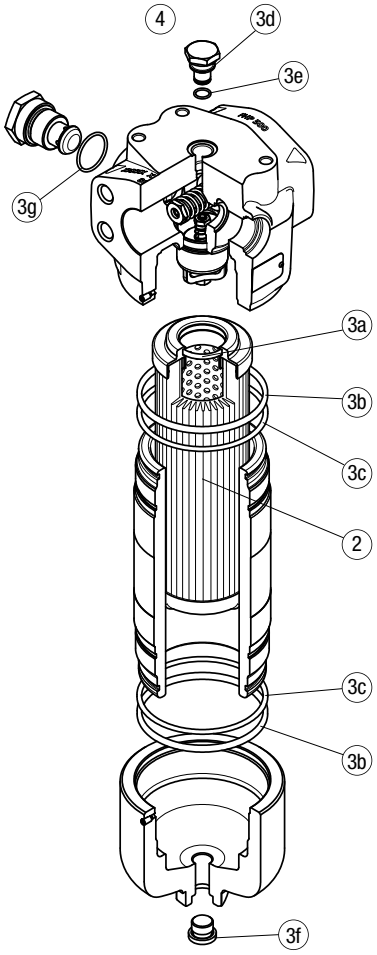

Item:	Q.ty: 1 pc. 2	Q.ty: 1 pc. 3 (3a ÷ 3g for FHP 350) (3a ÷ 3f for FHP 500)		Q.ty: 1 pc. 4	
Filter series	Filter element	Seal Kit code number NBR	Seal Kit code number FPM	Indicator connection plug NBR	Indicator connection plug FPM
FHP 350	See order table	02050272	02050283	T2H	T2V
FHP 500	See order table	02050330	02050331	T2H	T2V

FMM series

Maximum working pressure up to 42 MPa (420 bar) - Flow rate up to 300 l/min

FMM GENERAL INFORMATION

Description

High Pressure filters

In-line
Maximum working pressure up to 42 MPa (420 bar)
Flow rate up to 300 l/min

FMM is a range of versatile high pressure filter for protection of sensitive components in high pressure hydraulic systems in the mobile machines.
They are directly connected to the lines of the system through the hydraulic fittings.

Available features:
- Female threaded connections up to 1 1/4", for a maximum flow rate of 250 l/min
- Fine filtration rating, to get a good cleanliness level into the system
- Bypass valve, to relieve excessive pressure drop across the filter media
- Low collapse filter element "N", for use with filters provided with bypass valve
- Low collapse filter element with external support "R", for filter element protection against the back pressure caused by the check valve in filters provided with the bypass valve
- High collapse filter element with external support "S", for filter element protection against the back pressure caused by the check valve in filters not provided with the bypass valve
- Visual, electrical and electronic differential clogging indicators

Common applications:
- Agricultural machines
- Mobile machines

Technical data

Filter housing materials
- Head: Painted cast iron, black RAL 9005
- Housing: Phosphatized steel
- Bypass valve: Steel

Pressure
- Test pressure: 63 MPa (630 bar)
- Burst pressure: 126 MPa (1260 bar)
- Pulse pressure fatigue test: 1 000 000 cycles with pressure from 0 to 42 MPa (420 bar)

Bypass valve
- Opening pressure 600 kPa (6 bar) ±10%
- Other opening pressures on request.

Δp element type
- Microfiber filter elements - series N-R: 20 bar
- Microfiber filter elements - series S: 210 bar
- Wire mesh filter elements - series N: 20 bar
- Fluid flow through the filter element from OUT to IN

Seals
- Standard NBR series A
- Optional FPM series V

Temperature
From -25 °C to +110 °C

Connections
In-line Inlet/Outlet

Note
FMM filters are provided for vertical mounting

Weights [kg] and volumes [dm³]

Filter series	Weights [kg]					Volumes [dm³]				
	Length 1	2	3	4	5	Length 1	2	3	4	5
FMM 050	3.11	3.48	3.90	4.36	5.54	0.34	0.48	0.63	0.81	1.23
FMM 150	7.50	9.50	10.90	-	-	0.60	1.00	1.25	-	-

FILTER ASSEMBLY SIZING
Flow rates [l/min]

		Filter element design - N Series						Filter element design - S Series				
Filter series	Length	A03	A06	A10	A16	A25	M25	A03	A06	A10	A16	A25
FMM 050	1	42	43	79	82	106	147	29	39	57	59	74
	2	52	57	85	96	121	149	45	49	76	88	114
	3	66	69	97	106	130	150	58	61	89	99	125
	4	83	89	113	115	134	152	74	80	106	108	129
	5	107	110	130	134	141	154	93	95	111	121	139
FMM 150	1	81	88	156	163	179	295					
	2	142	145	227	230	236	312					
	3	170	180	242	245	263	315					

Maximum flow rate for a complete pressure filter with a pressure drop Δp = 1.5 bar.
The reference fluid has a kinematic viscosity of 30 mm^2/s (cSt) and a density of 0.86 kg/dm^3.
For different pressure drop or fluid viscosity we recommend to use our selection software available on www.mpfiltri.com.
You can also calculate the right size using the formulas present on the FILTER SIZING paragraph at the beginning of the full catalogue or at the beginning of the filter family brochure.
Please, contact our Sales Department for further additional information.

Hydraulic symbols

Filter series	Style S	Style B	Style T	Style D
FMM 050	•	•	•	•
FMM 150	•	•		

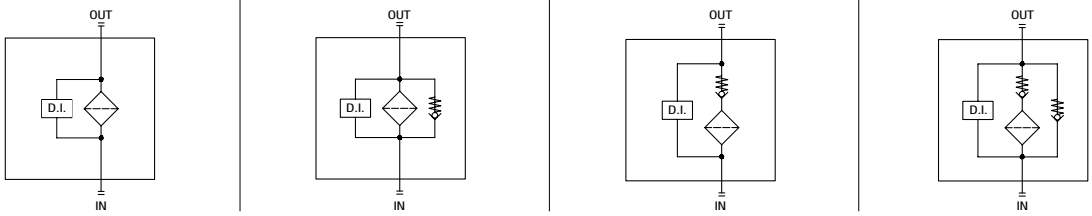

Pressure drop

Filter housings
Δp pressure drop

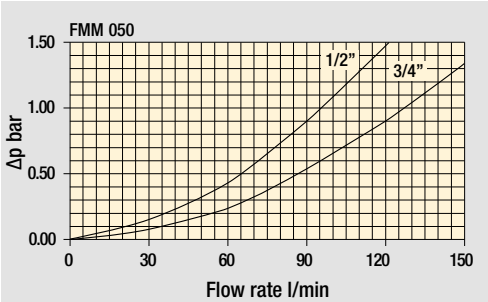

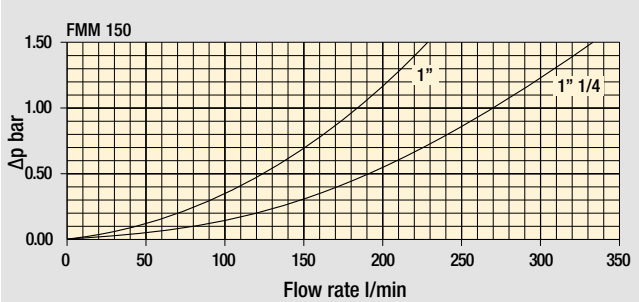

Bypass valve
pressure drop

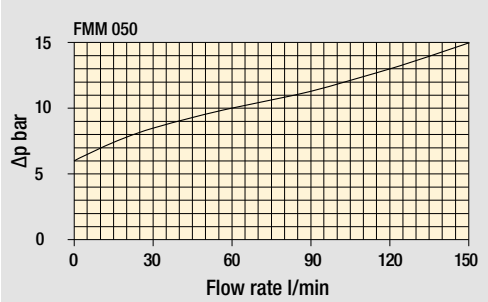

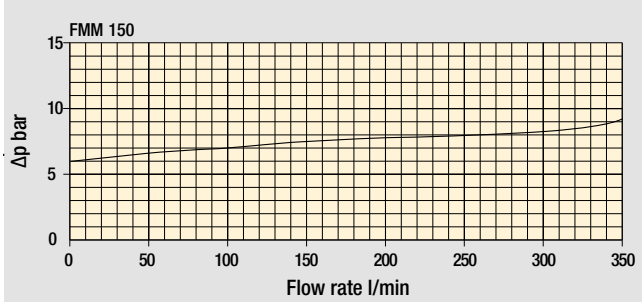

Valves

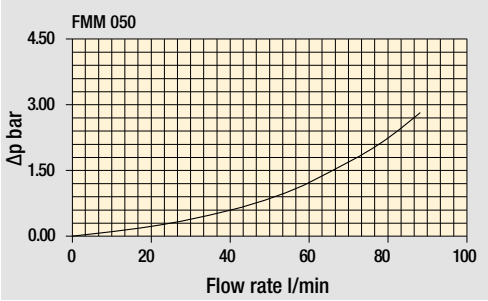

Filter housing
with check valve

The curves are plotted using mineral oil with density of 0.86 kg/dm^3 in compliance with ISO 3968. Δp varies proportionally with density.

FMM FMM050

Designation & Ordering code

COMPLETE FILTER

Configuration example: FMM050 | 3 | B | A | G | A10 | N | P01

Series and size
FMM050

Length
1 | 2 | 3 | 4 | 5 |

Valves
S Without bypass
B With bypass 6 bar
T With check valve, without bypass
D With check valve, with bypass 6 bar

Seals
A NBR
V FPM

Connections
A M18x1.5 - ISO 6149
B M22x1.5 - ISO 6149
C G 1/2”
D G 3/4”
E 1/2” NPT
F 3/4” NPT
G SAE 8 - 3/4” - 16 UNF
H SAE 12 - 1 1/16” - 12 UN

Filtration rating (filter media)

A03	Inorganic microfiber	3 µm
A06	Inorganic microfiber	6 µm
A10	Inorganic microfiber	10 µm
A16	Inorganic microfiber	16 µm
A25	Inorganic microfiber	25 µm
M25	Wire mesh	25 µm

Element Δp		Valves S	B	T	D
N	20 bar		•		
R	20 bar				•
S	210 bar	•		•	

Execution
P01 Upper connection for clogging indicator
P02 Without connection for clogging indicator
P03 Frontal connection for clogging indicator
Pxx Customized

FILTER ELEMENT

Configuration example: HP050 | 3 | A10 | A | N | P01

Element series and size
HP050

Element length
1 | 2 | 3 | 4 | 5 |

Filtration rating (filter media)

A03	Inorganic microfiber	3 µm
A06	Inorganic microfiber	6 µm
A10	Inorganic microfiber	10 µm
A16	Inorganic microfiber	16 µm
A25	Inorganic microfiber	25 µm
M25	Wire mesh	25 µm

Seals
A NBR
V FPM

Element Δp
N 20 bar
R 20 bar
S 210 bar

Execution
P01 MP Filtri standard
Pxx Customized

ACCESSORIES

Differential indicators		page
DEA	Electrical differential indicator	577
DEH	Hazardous area electronic differential indicator	577-578
DEM	Electrical differential indicator	578-579
DLA	Electrical / visual differential indicator	579-580
DLE	Electrical / visual differential indicator	580
DTA	Electronic differential indicator	581
DVA	Visual differential indicator	581
DVM	Visual differential indicator	581

Additional features		page
T2	Plug	582

FMM050	
Filter length	**H [mm]**
1	158
2	195
3	237
4	285
5	407

Connections	**R**
A-B-C-D	M10
E-F-G-H	3/8" UNC

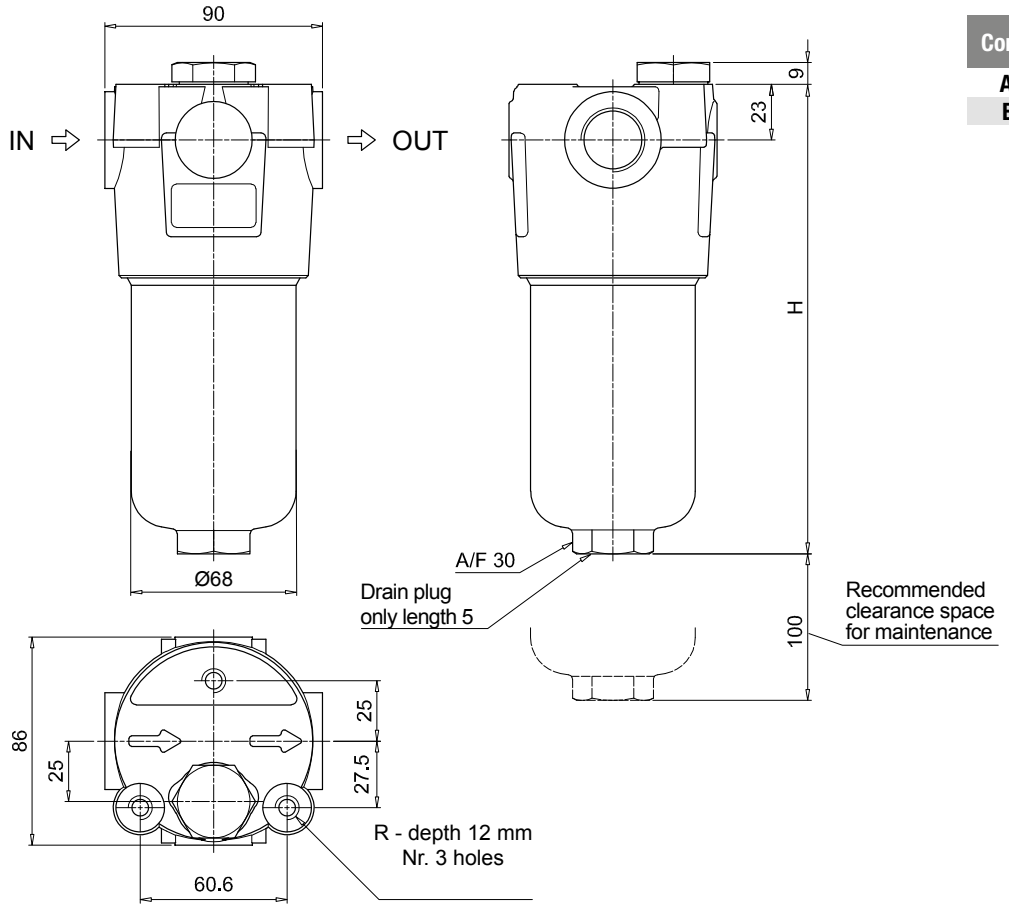

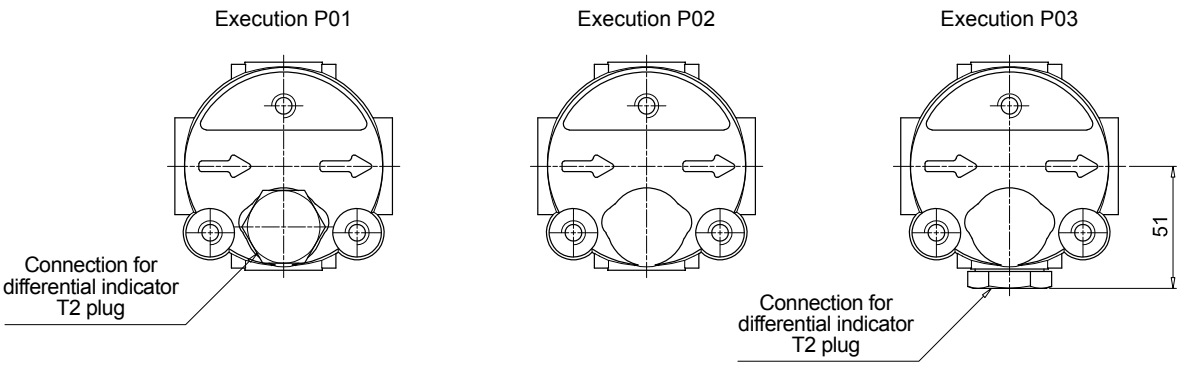

FMM FMM150

Designation & Ordering code

COMPLETE FILTER

Configuration example: FMM150 | 2 | B | A | D | 2 | M25 | N | P01

Series and size

FMM150

Length

1 | **2** | **3** |

Valves

S Without bypass
B With bypass 6 bar

Seals

A NBR
V FPM

Connections

C G 1”
D G 1 1/4”
E 1” NPT
F 1 1/4” NPT
G SAE 16 - 1 5/16” - 12 UN
H SAE 20 - 1 5/8” - 12 UN

Connection for differential indicator

1 Without connection
2 Upper connection
3 Frontal connection

Filtration rating (filter media)

A03	Inorganic microfiber	3 µm	**A16**	Inorganic microfiber	16 µm
A06	Inorganic microfiber	6 µm	**A25**	Inorganic microfiber	25 µm
A10	Inorganic microfiber	10 µm	**M25**	Wire mesh	25 µm

Element Δp

N 20 bar

Execution

P01 MP Filtri standard
Pxx Customized

FILTER ELEMENT

Configuration example: HP150 | 2 | M25 | A | N | P01

Element series and size

HP150

Element length

1 | **2** | **3** |

Filtration rating (filter media)

A03	Inorganic microfiber	3 µm	**A16**	Inorganic microfiber	16 µm
A06	Inorganic microfiber	6 µm	**A25**	Inorganic microfiber	25 µm
A10	Inorganic microfiber	10 µm	**M25**	Wire mesh	25 µm

Seals

A NBR
V FPM

Element Δp

N 20 bar

Execution

P01 MP Filtri standard
Pxx Customized

ACCESSORIES

Differential indicators

		page
DEA	Electrical differential indicator	577
DEH	Hazardous area electronic differential indicator	577-578
DEM	Electrical differential indicator	578-579
DLA	Electrical / visual differential indicator	579-580
DLE	Electrical / visual differential indicator	580
DTA	Electronic differential indicator	581
DVA	Visual differential indicator	581
DVM	Visual differential indicator	581

Additional features

		page
T2	Plug	582

FMM150	
Filter length	**H [mm]**
1	230
2	340
3	415

Connections	**R**
C-D	M10
E-F-G-H	3/8" UNC

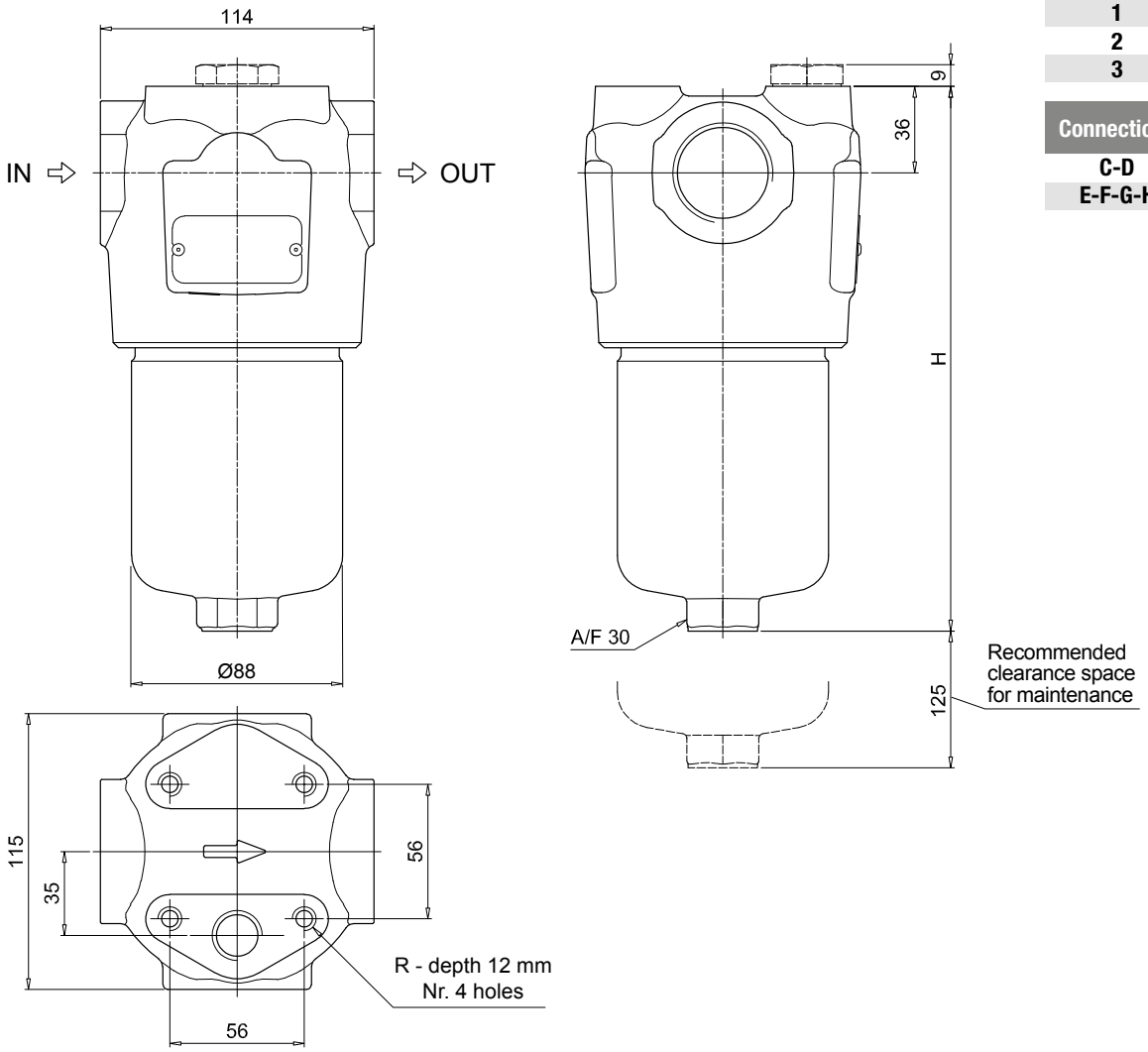

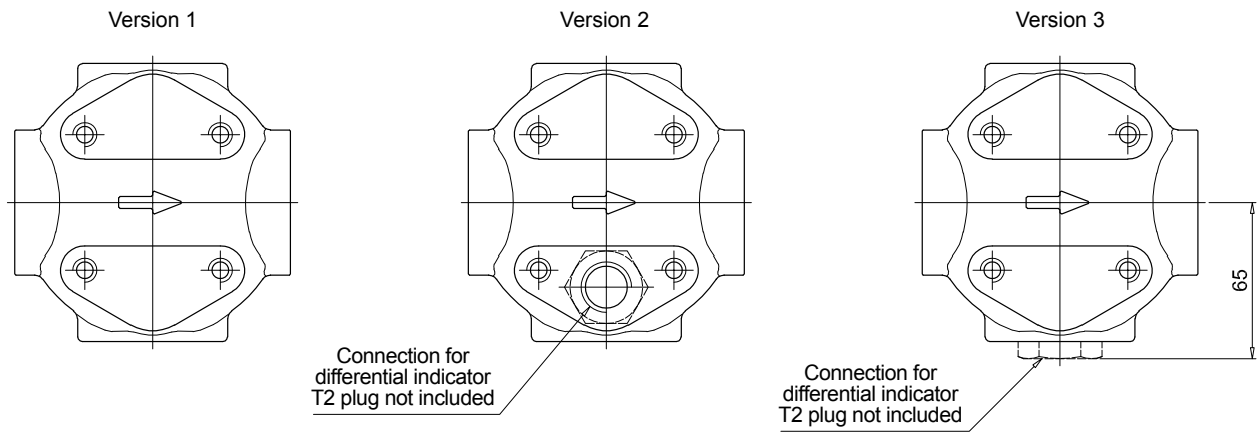

FMM SPARE PARTS

Order number for spare parts

FMM 050

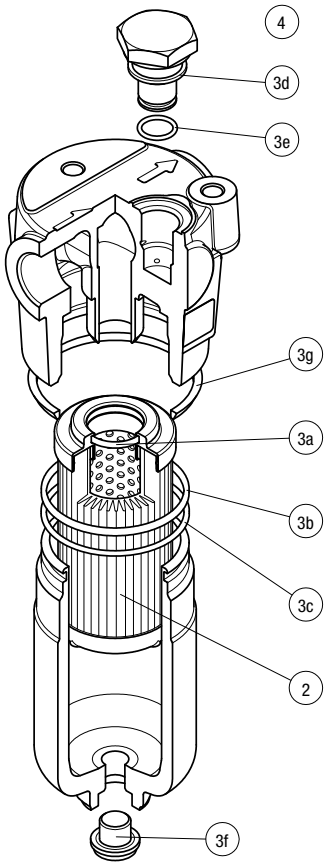

Item:	Q.ty: 1 pc. 2	Q.ty: 1 pc. 3 (3a ÷ 3g)		Q.ty: 1 pc. 4	
Filter series	Filter element	Seal Kit code number NBR	Seal Kit code number FPM	Indicator connection plug NBR	Indicator connection plug FPM
FMM 050	See order table	02050314	02050315	T2H	T2V

FMM 150

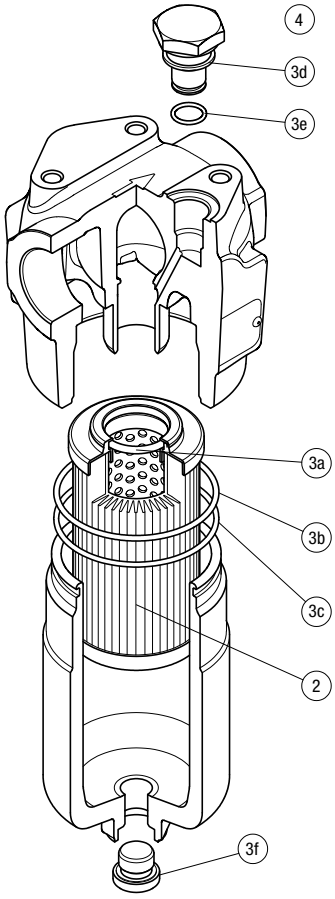

Item:	Q.ty: 1 pc. 2	Q.ty: 1 pc. 3 (3a ÷ 3f)		Q.ty: 1 pc. 4	
Filter series	Filter element	Seal Kit code number NBR	Seal Kit code number FPM	Indicator connection plug NBR	Indicator connection plug FPM
FMM 150	See order table	02050731	02050732	T2H	T2V

FHA 051 series

Maximum working pressure up to 56 MPa (560 bar) - Flow rate up to 150 l/min

FHA 051 GENERAL INFORMATION

Description

High Pressure filters

In-line
Maximum working pressure up to 56 MPa (560 bar)
Flow rate up to 150 l/min

FHA is a range of high pressure filter for protection of sensitive components in high pressure hydraulic systems in the mobile machines. They are directly connected to the lines of the system through the hydraulic fittings.

Available features:
- Female threaded connections up to 3/4", for a maximum flow rate of 150 l/min
- Fine filtration rating, to get a good cleanliness level into the system
- Bypass valve, to relieve excessive pressure drop across the filter media
- Check valve, to protect the system against reverse flow
- Reverse flow valve, to allow bidirectional flow through the filter housing. The back flow is not filtered
- Low collapse filter element "N", for use with filters provided with bypass valve
- Low collapse filter element with external support "R", for filter element protection against the back pressure caused by the check valve or the reverse flow in filters provided with the bypass valve
- High collapse filter element with external support "S", for filter element protection against the back pressure caused by the check valve or the reverse flow in filters not provided with the bypass valve
- Visual, electrical and electronic differential clogging indicators

Common applications:
Delivery lines, in any heavy duty industrial equipment or mobile machines

Technical data

Filter housing materials
- Head: Steel (chemical heat treatment)
- Housing: Steel (chemical heat treatment)
- Bypass valve: Steel

Pressure
- Test pressure: 84 MPa (840 bar)
- Burst pressure: 168 MPa (1680 bar)
- Pulse pressure fatigue test: 1 00 000 cycles with pressure from 0 to 56 MPa (560 bar)

Bypass valve
- Opening pressure 600 kPa (6 bar) ±10%
- Other opening pressures on request.

Δp element type
- Microfibre filter elements - series N-R: 20 bar
- Microfibre filter elements - series S: 210 bar
- Wire mesh filter elements - series N: 20 bar
- Fluid flow through the filter element from OUT to IN

Seals
- Standard NBR series A
- Optional FPM series V

Temperature
From -25 °C to +110 °C

Connections
In-line Inlet/Outlet

Note
FHA filters are provided for vertical mounting

Weights [kg] and volumes [dm³]

Filter series	Weights [kg]						Volumes [dm³]					
	Length	1	2	3	4	5	Length	1	2	3	4	5
FHA 051		3.28	3.65	4.06	4.54	5.74		0.33	0.47	0.62	0.79	1.23

FILTER ASSEMBLY SIZING
Flow rates [l/min]

		Filter element design - N Series						Filter element design - R Series					Filter element design - S Series				
Filter series	Length	A03	A06	A10	A16	A25	M25	A03	A06	A10	A16	A25	A03	A06	A10	A16	A25
	1	42	41	82	85	110	156	42	41	82	85	110	30	40	58	60	76
	2	53	58	87	100	127	158	53	58	87	100	127	45	50	78	91	120
FHA 051	3	68	71	101	111	137	160	68	71	101	111	137	59	62	92	103	131
	4	86	92	118	121	142	162	86	92	118	121	142	77	83	110	113	137
	5	112	115	137	142	150	165	112	115	137	142	150	96	99	116	128	147

Maximum flow rate for a complete pressure filter with a pressure drop Δp = 1.5 bar.
The reference fluid has a kinematic viscosity of 30 mm²/s (cSt) and a density of 0.86 kg/dm³.
For different pressure drop or fluid viscosity we recommend to use our selection software available on www.mpfiltri.com.
You can also calculate the right size using the formulas present on the FILTER SIZING paragraph at the beginning of the full catalogue or at the beginning of the filter family brochure.
Please, contact our Sales Department for further additional information.

Hydraulic symbols

Filter series	Style S	Style B	Style T	Style D	Style V	Style Z
FHA 051	•	•	•	•	•	•

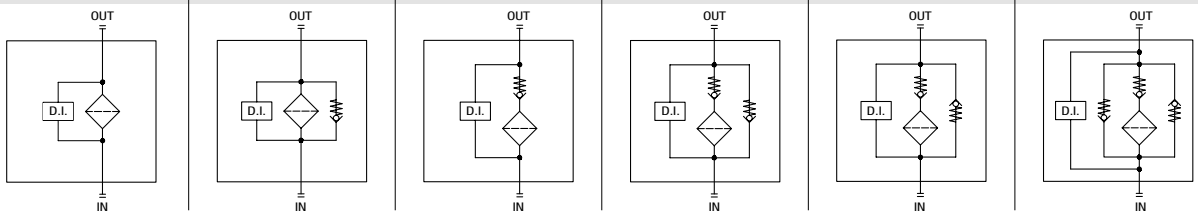

Pressure drop

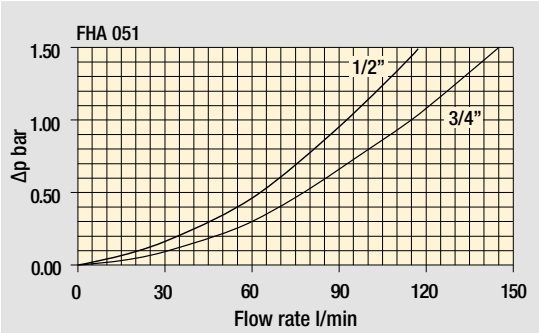

Filter housings
Δp pressure drop

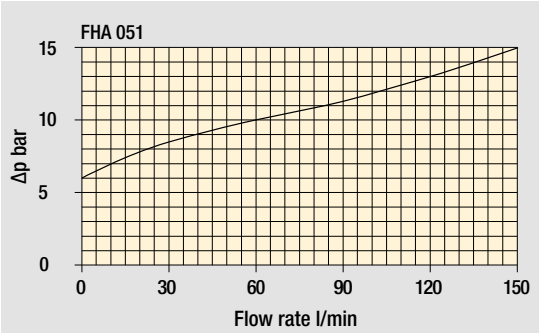

Bypass valve
pressure drop

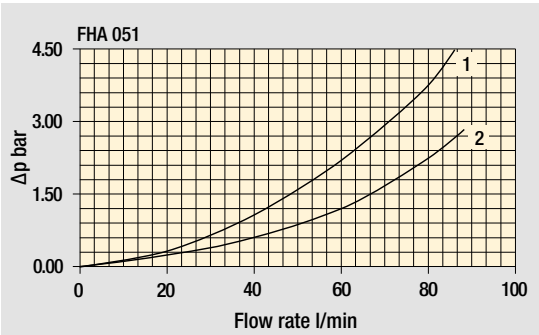

Pressure drop in reverse flow valves

1 - Reverse flow
2 - In filter direction

The curves are plotted using mineral oil with density of 0.86 kg/dm³ in compliance with ISO 3968. Δp varies proportionally with density.

FHA 051

Designation & Ordering code

COMPLETE FILTER

Configuration example: FHA051 | 3 | B | A | G | A10 | N | P01

Series and size
FHA051

Length
1 | 2 | 3 | 4 | 5 |

Valves

S	Without bypass
B	With bypass 6 bar
T	With check valve, without bypass
D	With check valve, with bypass 6 bar
V	With reverse flow, without bypass
Z	With reverse flow, with bypass 6 bar

Seals

A	NBR
V	FPM

Connections

A	M18x1.5 - ISO 6149	**E**	1/2” NPT
B	M22x1.5 - ISO 6149	**F**	3/4” NPT
C	G 1/2”	**G**	SAE 8 - 3/4” - 16 UNF
D	G 3/4”	**H**	SAE 12 - 1 1/16” - 12 UN

Filtration rating (filter media)

A03	Inorganic microfiber	3 µm
A06	Inorganic microfiber	6 µm
A10	Inorganic microfiber	10 µm
A16	Inorganic microfiber	16 µm
A25	Inorganic microfiber	25 µm
M25	Wire mesh	25 µm

Element Δp		Valves S	B	T	D	V	Z
N	20 bar		•				
R	20 bar				•		•
S	210 bar	•		•		•	

Execution

P01	Upper connection for clogging indicator
P02	Without connection for clogging indicator
P03	Frontal connection for clogging indicator
Pxx	Customized

FILTER ELEMENT

Configuration example: HP050 | 3 | A10 | A | N | P01

Element series and size
HP050

Element length
1 | 2 | 3 | 4 | 5 |

Filtration rating (filter media)

A03	Inorganic microfiber	3 µm
A06	Inorganic microfiber	6 µm
A10	Inorganic microfiber	10 µm
A16	Inorganic microfiber	16 µm
A25	Inorganic microfiber	25 µm
M25	Wire mesh	25 µm

Seals

A	NBR
V	FPM

Element Δp

N	20 bar
R	20 bar
S	210 bar

Execution

P01	MP Filtri standard
Pxx	Customized

ACCESSORIES

Differential indicators		page
DEA	Electrical differential indicator	577
DEH	Hazardous area electronic differential indicator	577-578
DEM	Electrical differential indicator	578-579
DLA	Electrical / visual differential indicator	579-580
DLE	Electrical / visual differential indicator	580
DTA	Electronic differential indicator	581
DVA	Visual differential indicator	581
DVM	Visual differential indicator	581

Additional features		page
T2	Plug	582

FHA051	
Filter length	**H [mm]**
1	158
2	195
3	237
4	285
5	407

Connections	R
A-B-C-D	M10
E-F-G-H	3/8" UNC

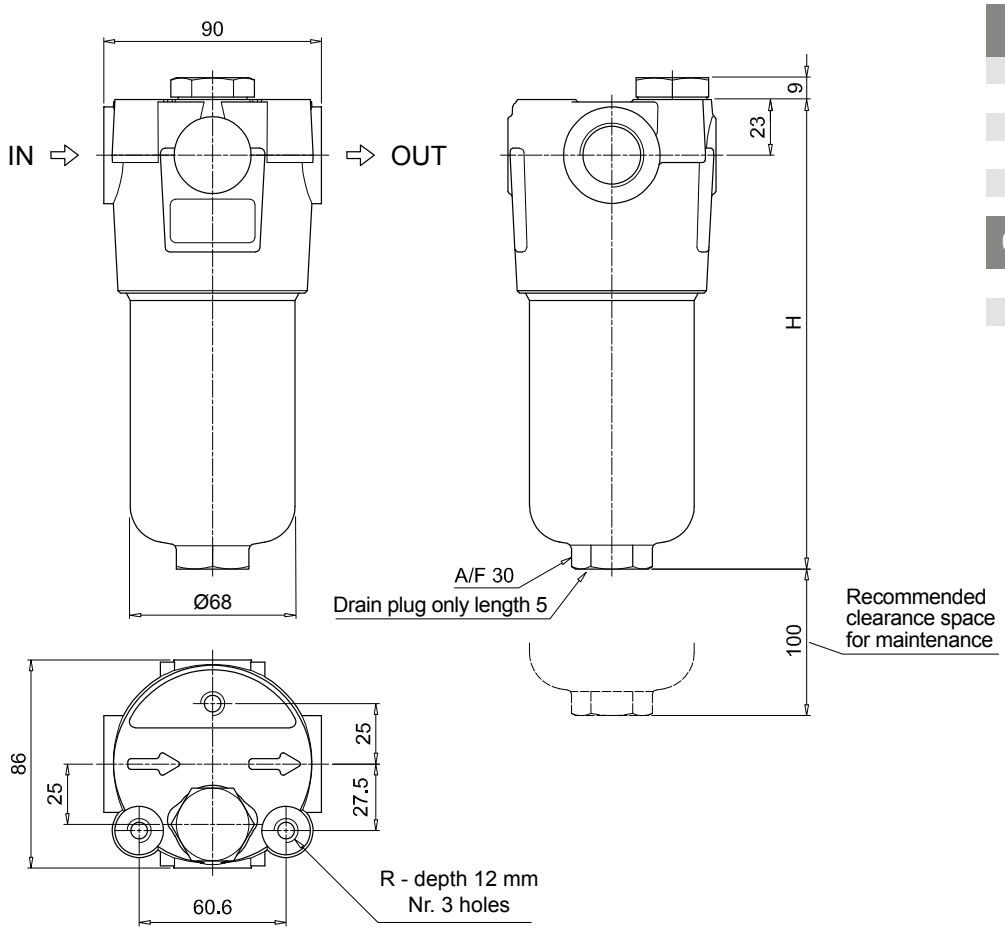

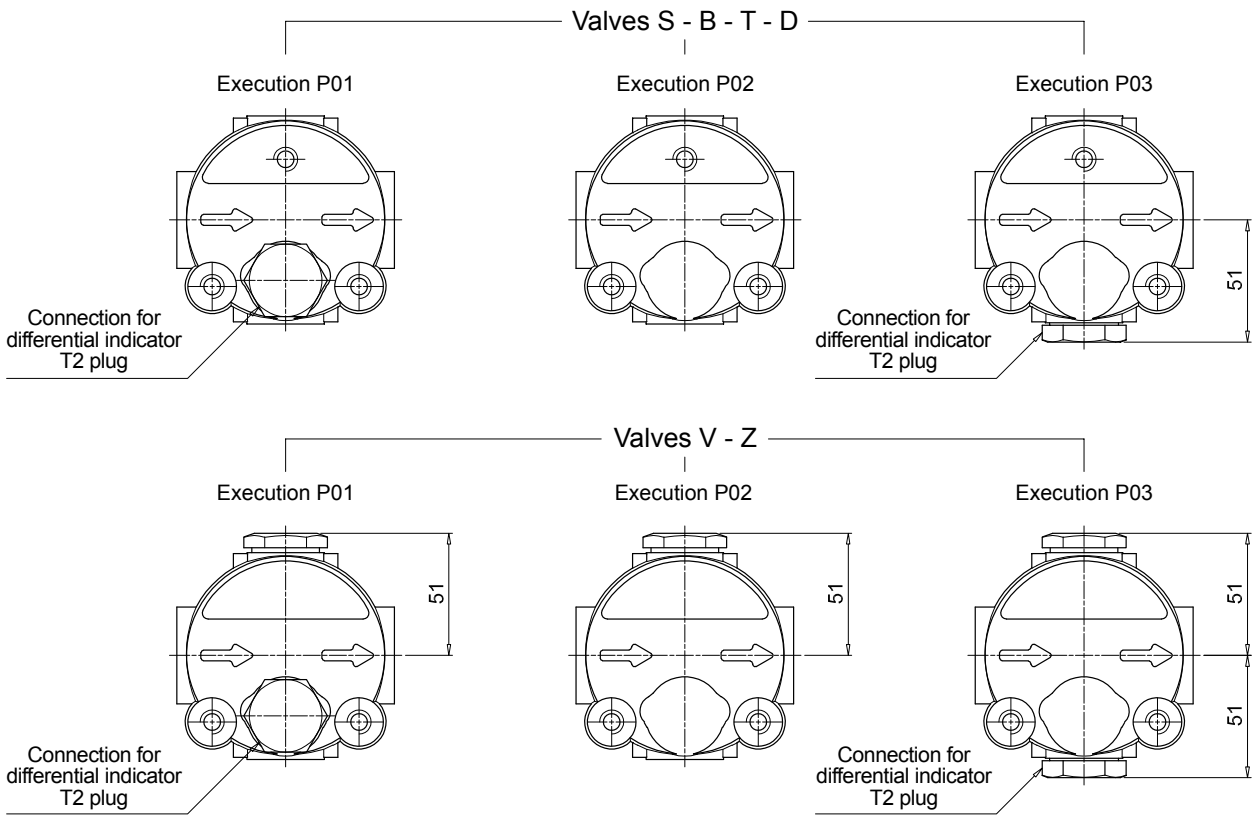

FHA 051 SPARE PARTS

Order number for spare parts

FHA 051

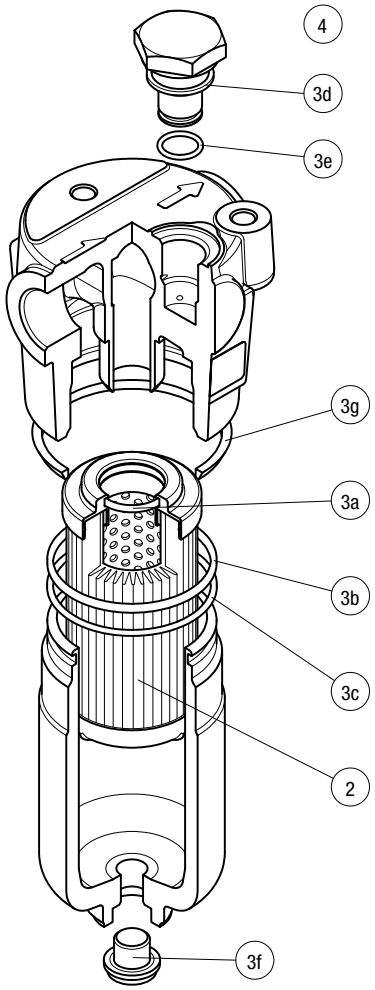

Item:	Q.ty: 1 pc. 2	Q.ty: 1 pc. 3 (3a ÷ 3g)		Q.ty: 1 pc. 4	
Filter series	**Filter element**	**Seal Kit code number NBR**	**FPM**	**Indicator connection plug NBR**	**FPM**
FHA 051	See order table	02050288	02050305	T2H	T2V

FHM series

Maximum working pressure up to 32 MPa (320 bar) - Flow rate up to 400 l/min

FHM GENERAL INFORMATION

Description

High Pressure filters

Manifold
Maximum working pressure up to 32 MPa (320 bar)
Flow rate up to 400 l/min

FHM is a range of high pressure filter for protection of sensitive components in high pressure hydraulic systems in the mobile machines.
They are directly connected to the top of the manifold, through the proper flanged interface.

Available features:
Available features:
- Manifold connections up to Ø30 mm, for a maximum flow rate of 400 l/min
- ISO 4401 CETOP 3 and CETOP 5 interface, for direct mounting on the CETOP valves
- Fine filtration rating, to get a good cleanliness level into the system
- Bypass valve, to relieve excessive pressure drop across the filter media
- Check valve, to protect the system against reverse flow
- Low collapse filter element "N", for use with filters provided with bypass valve
- High collapse filter element "H", for use with filters not provided with bypass valve
- High collapse filter element with external support "S", for filter element protection against the back pressure caused by the check valve in filters not provided with the bypass valve
- Visual, electrical and electronic differential clogging indicators

Common applications:
Delivery lines, in any high pressure industrial equipment

Technical data

Filter housing materials
- Head
  Phosphatized cast iron: FHM 006-007-010
  Phosphatized steel: FHM 050-065-135-320-500

- Housing: Phosphatized steel

- Bypass valve: Steel

- Check valve: Steel

Pressure
- Test pressure: 48 MPa (480 bar)
- Burst pressure: 96 MPa (960 bar)
- Pulse pressure fatigue test: 1 000 000 cycles with pressure from 0 to 32 MPa (320 bar)

Bypass valve
- Opening pressure 600 kPa (6 bar) ±10%
- Other opening pressures on request.

Δp element type
- Microfibre filter elements - series N: 20 bar (not available for FHM 006, FHM 007 and FHM 010)
- Microfibre filter elements - series H: 210 bar (not available for FHM 050 and FHM 500)
- Microfibre filter elements - series S: 210 bar (only for FHM 050 and FHM 500)
- Wire mesh filter elements - series N: 20 bar (not available for FHM 006)
- Wire mesh filter elements - series H: 210 bar (not available for FHM 050 and FHM 500)
- Fluid flow through the filter element from OUT to IN

Seals
- Standard NBR series A
- Optional FPM series V

Temperature
From -25 °C to +110 °C

Connections
Manifold mounting

Note
FHM filters are provided for vertical mounting

Weights [kg] and volumes [dm³]

Filter series	Weights [kg]					Volumes [dm³]				
	Length 1	2	3	4	5	Length 1	2	3	4	5
FHM 006	2.17	-	-	-	-	0.12	-	-	-	-
FHM 007	-	4.74	5.95	-	-	-	0.30	0.50	-	-
FHM 010	-	4.74	5.95	-	-	-	0.30	0.50	-	-
FHM 050	5.31	5.68	6.09	6.56	7.74	0.29	0.38	0.48	0.60	0.89
FHM 065	5.47	5.83	7.04	-	-	0.27	0.34	0.56	-	-
FHM 135	8.78	10.38	11.43	-	-	0.49	0.82	1.03	-	-
FHM 320	19.80	21.93	24.22	26.70	-	1.04	1.76	2.53	3.36	-
FHM 500	35.00	39.17	42.69	54.70	60.50	1.63	2.35	2.96	5.11	6.44

FILTER ASSEMBLY SIZING
Flow rates [l/min]

		Filter element design - H Series					
Filter series	Length	A03	A06	A10	A16	A25	M25
FHM 006	**1**	9	10	13	14	15	16
FHM 007	**2**	13	13	15	16	16	16
	3	15	15	16	16	17	17
FHM 010	**2**	23	25	32	34	37	38
	3	31	33	37	38	39	40

		Filter element design - N Series						Filter element design - S Series				
Filter series	Length	A03	A06	A10	A16	A25	M25	A03	A06	A10	A16	A25
FHM 050	**1**	38	37	65	67	81	101	28	36	50	52	62
	2	46	50	69	75	89	102	41	44	63	71	85
	3	57	59	76	81	93	103	51	53	71	77	90
	4	68	71	84	86	95	103	62	66	81	82	93
	5	82	83	93	95	98	105	73	75	83	89	97

		Filter element design - N Series						Filter element design - H Series				
Filter series	Length	A03	A06	A10	A16	A25	M25	A03	A06	A10	A16	A25
FHM 065	**1**	23	30	48	53	71	102	22	23	43	50	67
	2	30	45	59	64	81	103	30	34	56	62	76
	3	52	60	78	82	92	105	51	58	77	81	91
FHM 135	**1**	61	65	99	104	131	149	46	51	83	86	122
	2	91	96	118	119	155	167	79	92	109	111	134
	3	118	119	144	146	156	168	103	112	130	137	146
FHM 320	**1**	112	121	187	217	252	312	97	102	156	162	228
	2	200	214	281	293	320	328	161	181	237	241	282
	3	245	267	312	320	325	333	207	233	275	280	306
	4	267	281	315	325	336	341	232	247	279	283	309

		Filter element design - N Series						Filter element design - S Series				
Filter series	Length	A03	A06	A10	A16	A25	M25	A03	A06	A10	A16	A25
FHM 500	**1**	211	232	281	289	309	394	126	135	208	210	261
	2	242	262	303	308	330	397	187	206	258	266	285
	3	284	294	336	338	357	399	226	230	285	290	315
	4	302	325	346	350	361	401	251	273	314	315	341
	5	325	334	356	361	373	401	296	301	335	338	360

Maximum flow rate for a complete pressure filter with a pressure drop Δp = 1.5 bar.
The reference fluid has a kinematic viscosity of 30 mm^2/s (cSt) and a density of 0.86 kg/dm^3.
For different pressure drop or fluid viscosity we recommend to use our selection software available on www.mpfiltri.com.
You can also calculate the right size using the formulas present on the FILTER SIZING paragraph at the beginning of the full catalogue or at the beginning of the filter family brochure.
Please, contact our Sales Department for further additional information.

Hydraulic symbols

Filter series	Stile S	Stile S	Stile S	Stile B	Stile T	Stile D
FHM 006	•					
FHM 007	•					
FHM 010		•				
FHM 050			•	•	•	•
FHM 065			•	•	•	•
FHM 135			•	•	•	•
FHM 320			•	•	•	•
FHM 500			•	•	•	•
	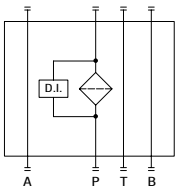	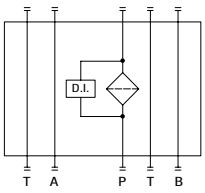	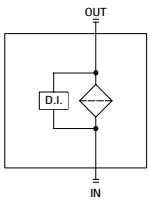	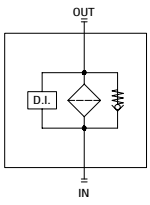	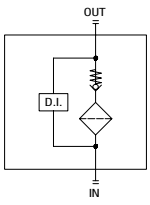	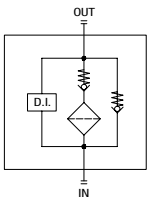

Pressure drop

Filter housings Δp pressure drop

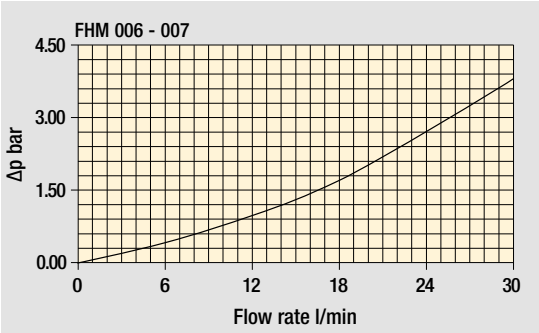

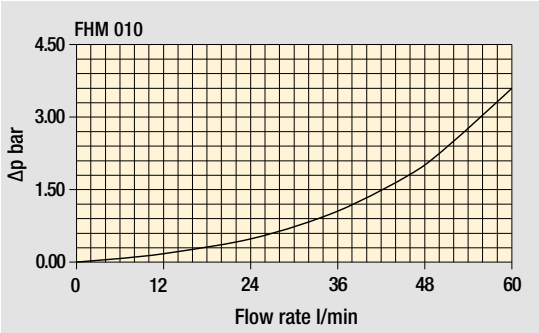

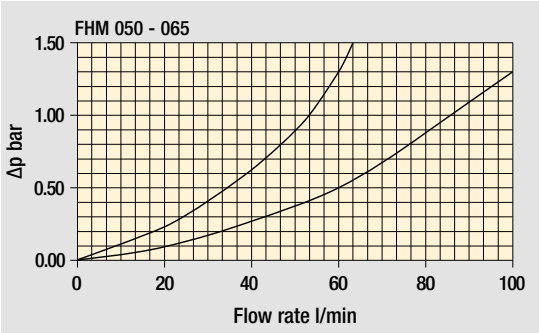

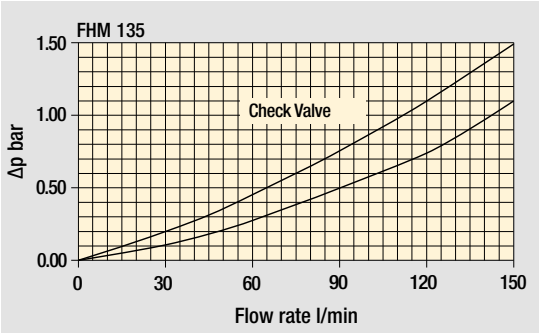

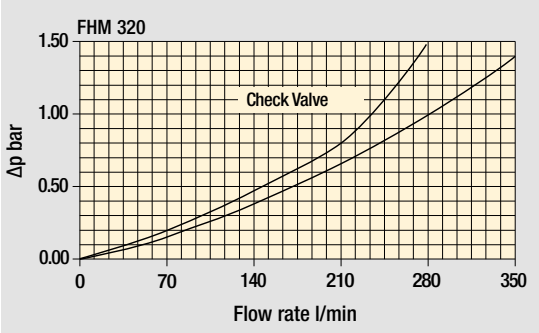

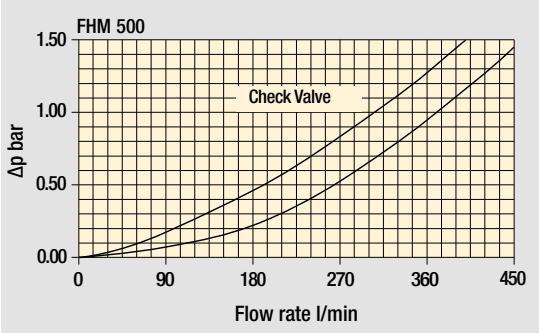

Bypass valve pressure drop

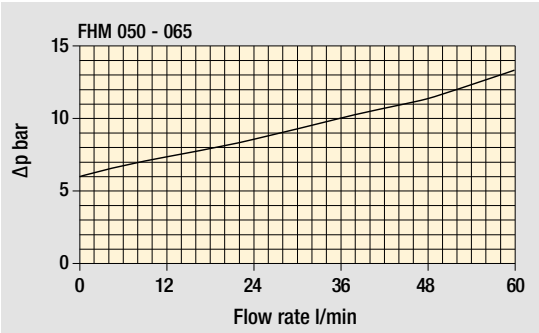

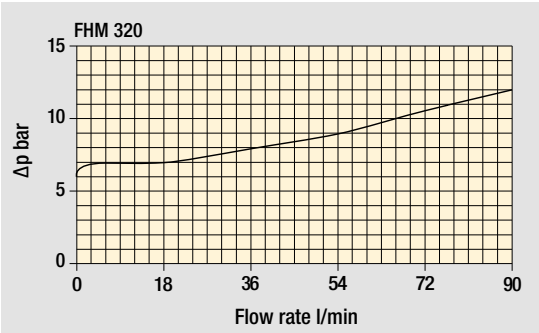

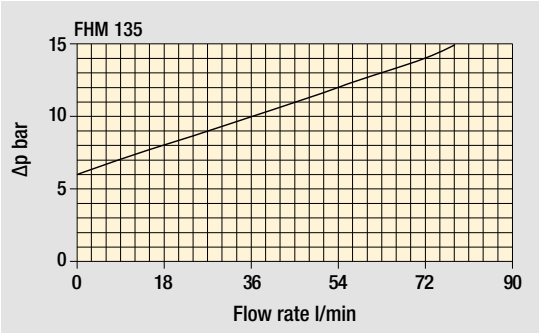

The curves are plotted using mineral oil with density of 0.86 kg/dm^3 in compliance with ISO 3968. Δp varies proportionally with density.

FHM FHM006 - FHM007 - FHM010

Designation & Ordering code

COMPLETE FILTER

Configuration example: FHM010 | 2 | S | V | G1 | A03 | H | P01

Series and size

FHM006 | FHM007 | FHM010

Length	FHM006	FHM007	FHM010
1	•		
2		•	•
3		•	•

Valves

S Without bypass

Seals

A NBR
V FPM

Connections

G1 Manifold side "A"
G2 Manifold side "B"

Filtration rating (filter media)

A03	Inorganic microfiber	3 µm	**A16**	Inorganic microfiber	16 µm
A06	Inorganic microfiber	6 µm	**A25**	Inorganic microfiber	25 µm
A10	Inorganic microfiber	10 µm	**M25**	Wire mesh	25 µm

Element Δp

H 210 bar

Execution

P01 MP Filtri standard
Pxx Customized

FILTER ELEMENT

Configuration example: HP065 | 2 | A03 | A | H | P01

Element series and size

	FHM006	FHM007	FHM010
HP011	•		
HP065		•	•

Element length	FHM006	FHM007	FHM010
2		•	•
3	•	•	•

Filtration rating (filter media)

A03	Inorganic microfiber	3 µm	**A16**	Inorganic microfiber	16 µm
A06	Inorganic microfiber	6 µm	**A25**	Inorganic microfiber	25 µm
A10	Inorganic microfiber	10 µm	**M25**	Wire mesh	25 µm

Seals

A NBR
V FPM

Element Δp

H 210 bar

Execution

P01 MP Filtri standard
Pxx Customized

ACCESSORIES

Differential indicators		page
DEA	Electrical differential indicator	577
DEH	Hazardous area electronic differential indicator	577-578
DEM	Electrical differential indicator	578-579
DLA	Electrical / visual differential indicator	579-580
DLE	Electrical / visual differential indicator	580
DTA	Electronic differential indicator	581
DVA	Visual differential indicator	581
DVM	Visual differential indicator	581

Additional features		page
T2	Plug	582

FHM006
Connection G1

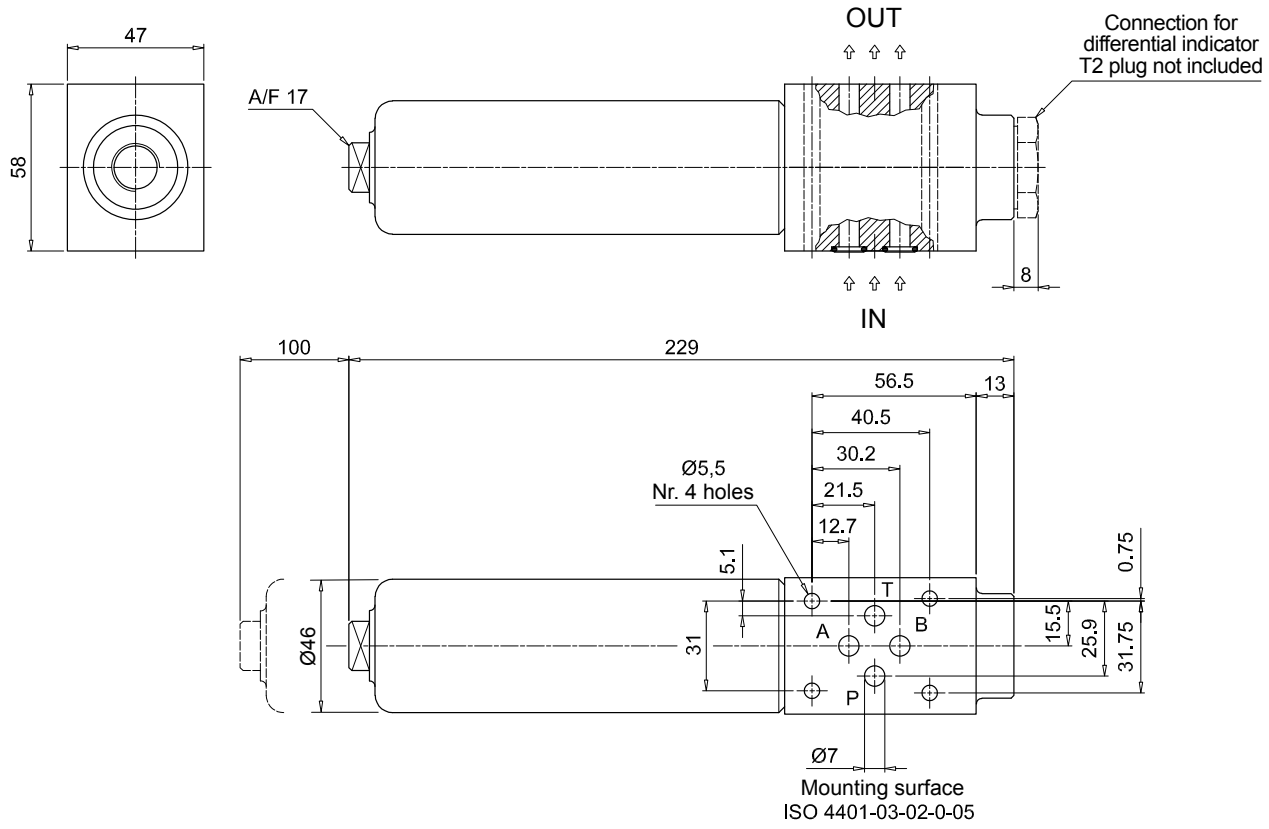

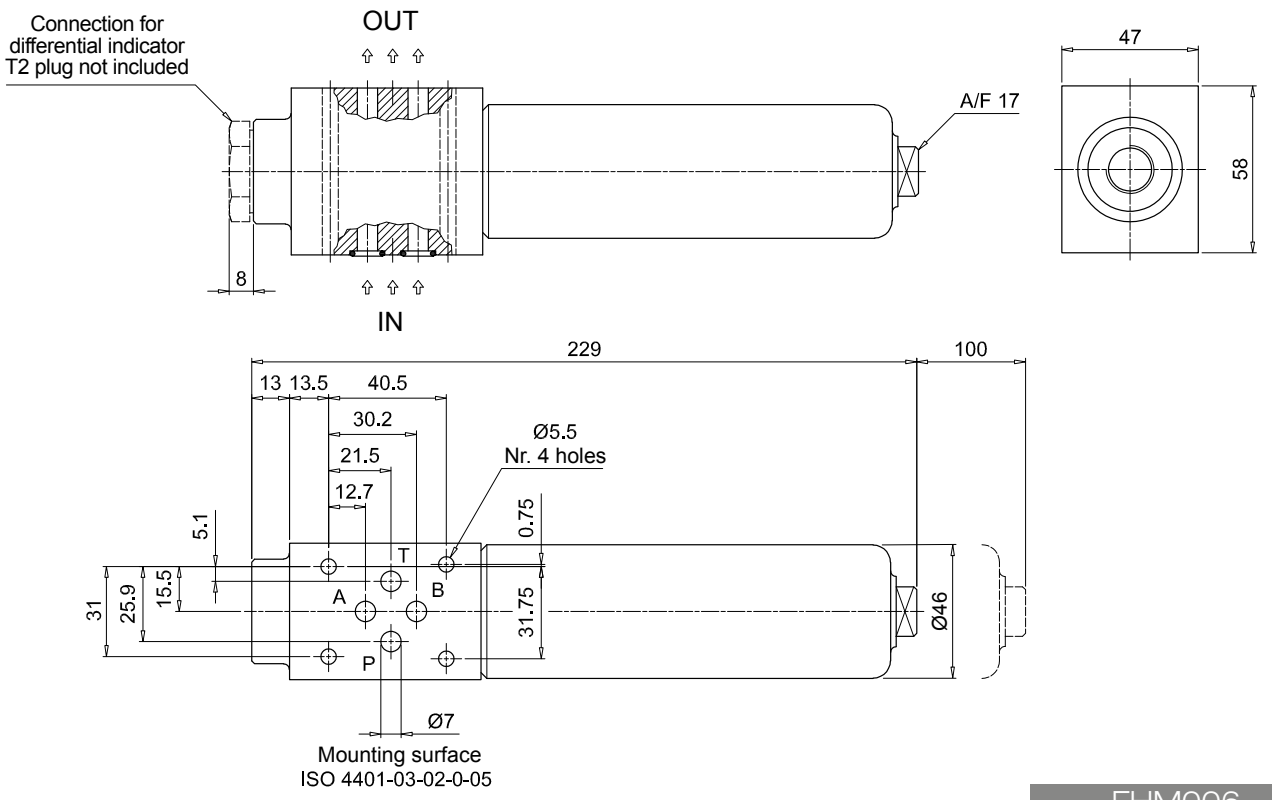

FHM006
Connection G2

Dimensions

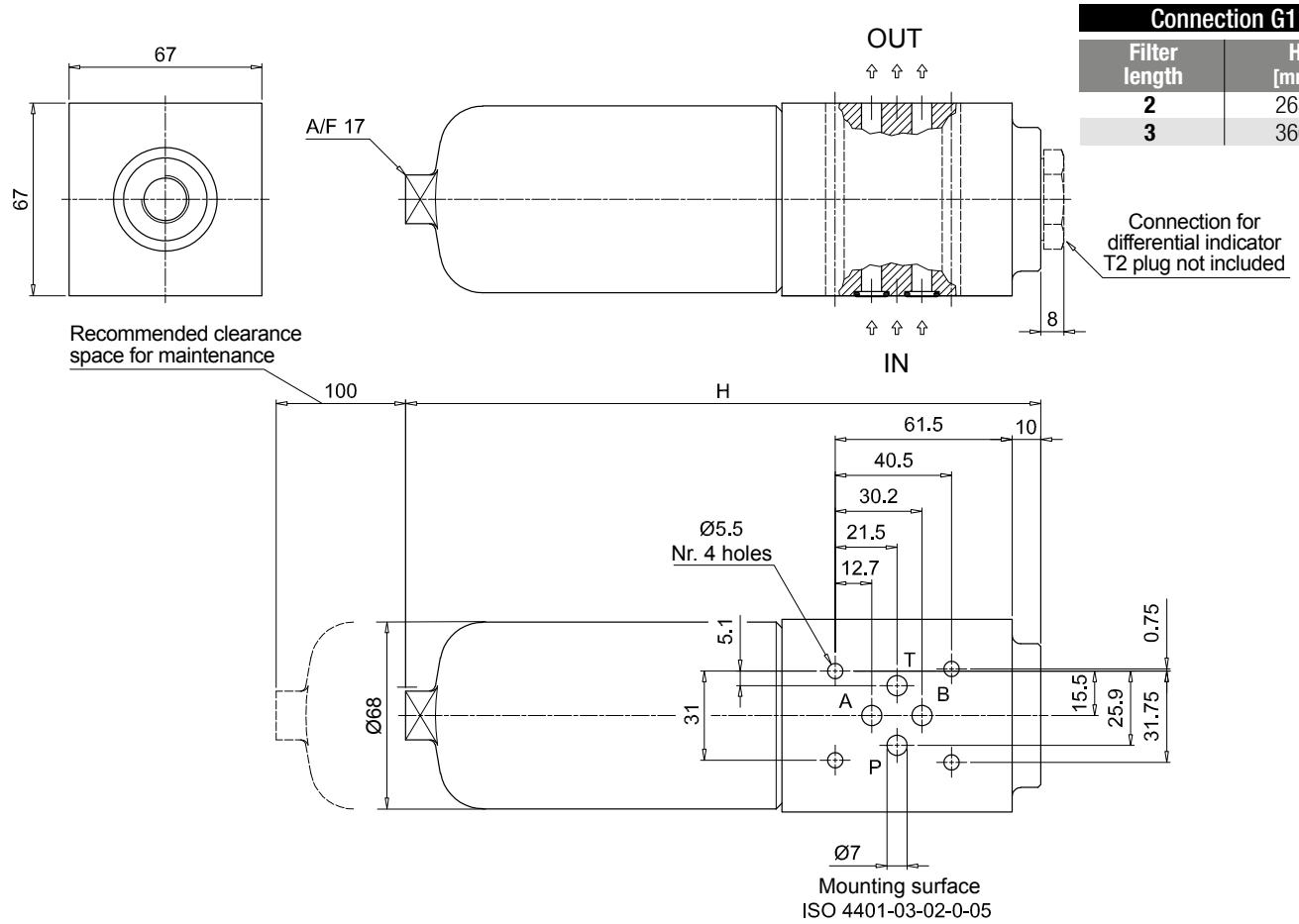

FHM007	
Connection G1	
Filter length	**H [mm]**
2	265
3	366

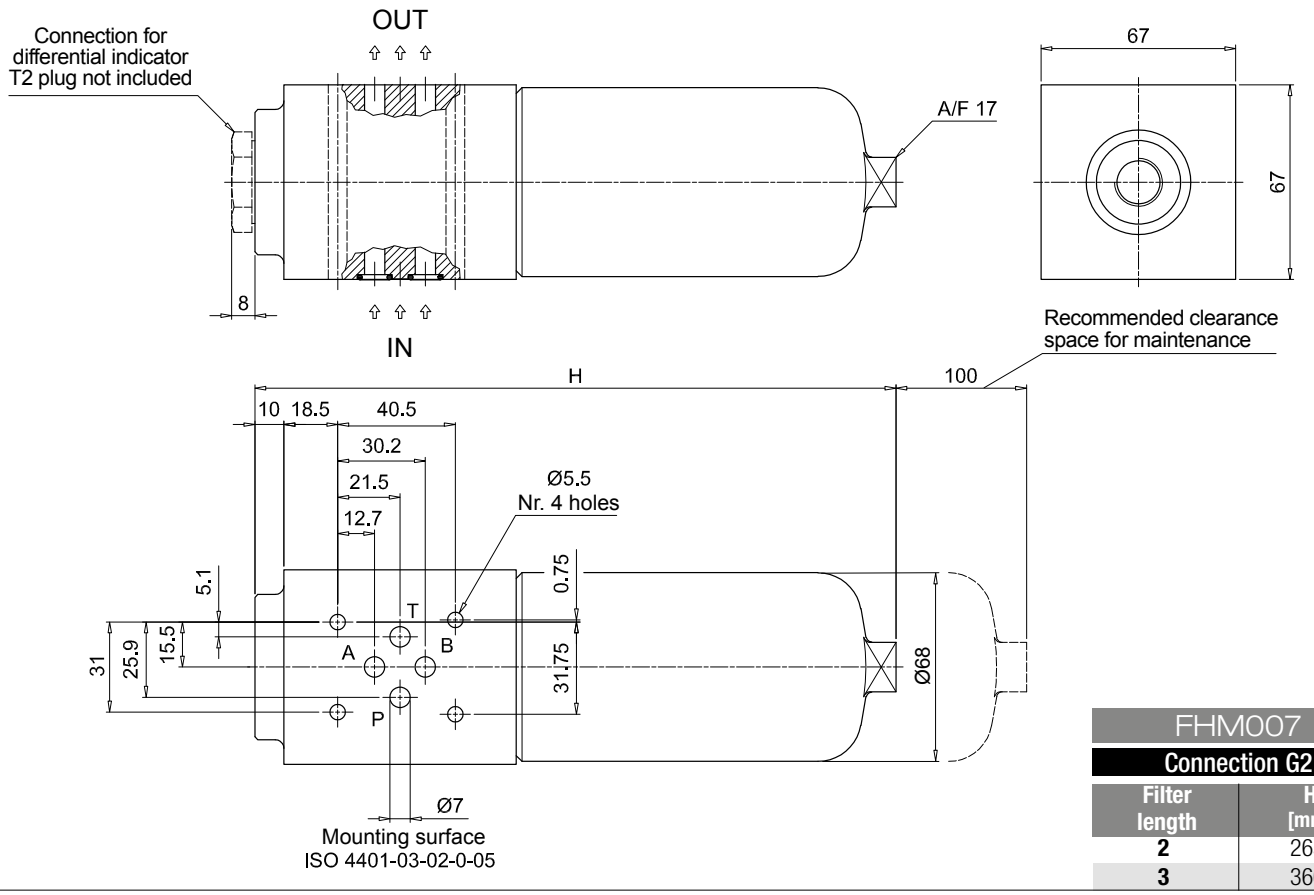

FHM007	
Connection G2	
Filter length	**H [mm]**
2	265
3	366

Dimensions

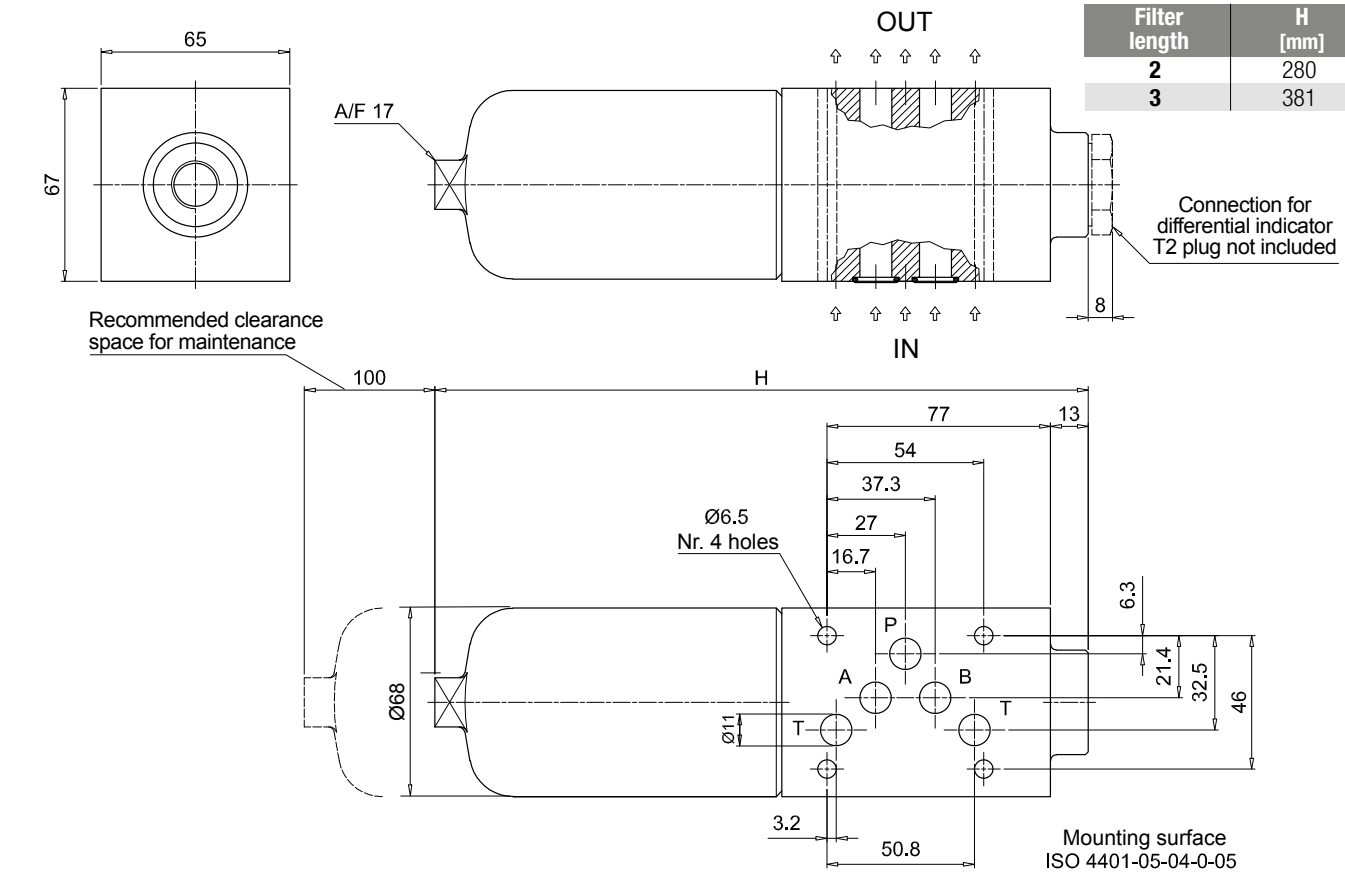

FHM010	
Connection G1	
Filter length	**H [mm]**
2	280
3	381

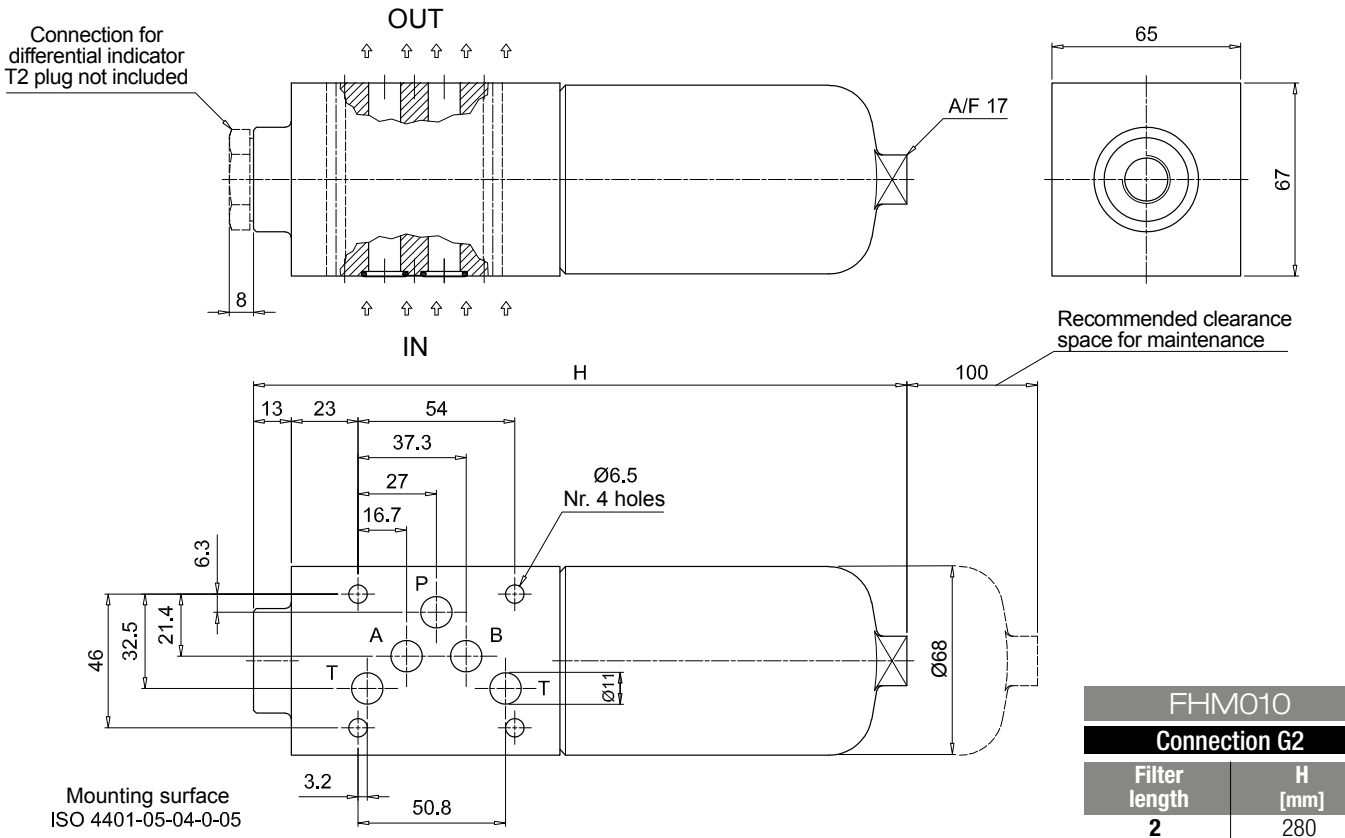

FHM010	
Connection G2	
Filter length	**H [mm]**
2	280
3	381

FHM FHM050 - FHM065 - FHM135

Designation & Ordering code

COMPLETE FILTER

Configuration example: FHM135 | 3 | S | A | F1 | A10 | H | P01

Series and size

FHM050 | **FHM065** | **FHM135**

Length	FHM050	FHM065	FHM135
1	•	•	•
2	•	•	•
3	•	•	•
4	•		
5	•		

Valves

S	Without bypass
B	With bypass 6 bar
T	With check valve, without bypass
D	With check valve, with bypass 6 bar

Seals

A	NBR
V	FPM

Connections

F1	Manifold

Filtration rating (filter media)

A03	Inorganic microfiber	3 µm	**A16**	Inorganic microfiber	16 µm
A06	Inorganic microfiber	6 µm	**A25**	Inorganic microfiber	25 µm
A10	Inorganic microfiber	10 µm	**M25**	Wire mesh	25 µm

Valves:	FHM050				FHM065-135			
Element Δp	S	B	T	D	S	B	T	D
N 20 bar		•		•		•		•
H 210 bar					•		•	
S 210 bar	•		•					

Execution

P01	MP Filtri standard
Pxx	Customized

FILTER ELEMENT

Configuration example: HP135 | 3 | A10 | A | H | P01

Element series and size

HP050 | **HP065** | **HP135**

Element length	HP050	HP065	HP135
1	•	•	•
2	•	•	•
3	•	•	•
4	•		
5	•		

Filtration rating (filter media)

A03	Inorganic microfiber	3 µm	**A16**	Inorganic microfiber	16 µm
A06	Inorganic microfiber	6 µm	**A25**	Inorganic microfiber	25 µm
A10	Inorganic microfiber	10 µm	**M25**	Wire mesh	25 µm

Seals

A	NBR
V	FPM

Element Δp	HP050	HP065	HP135
N 20 bar	•	•	•
H 210 bar		•	•
S 210 bar	•		

Execution

P01	MP Filtri standard
Pxx	Customized

ACCESSORIES

Differential indicators

		page
DEA	Electrical differential indicator	577
DEH	Hazardous area electronic differential indicator	577-578
DEM	Electrical differential indicator	578-579
DLA	Electrical / visual differential indicator	579-580
DLE	Electrical / visual differential indicator	580
DTA	Electronic differential indicator	581
DVA	Visual differential indicator	581
DVM	Visual differential indicator	581

Additional features

		page
T2	Plug	582

Dimensions

FHM050	
Filter length	**H [mm]**
1	154
2	191
3	233
4	281
5	403

FHM065	
Filter length	**H [mm]**
1	162
2	193
3	295

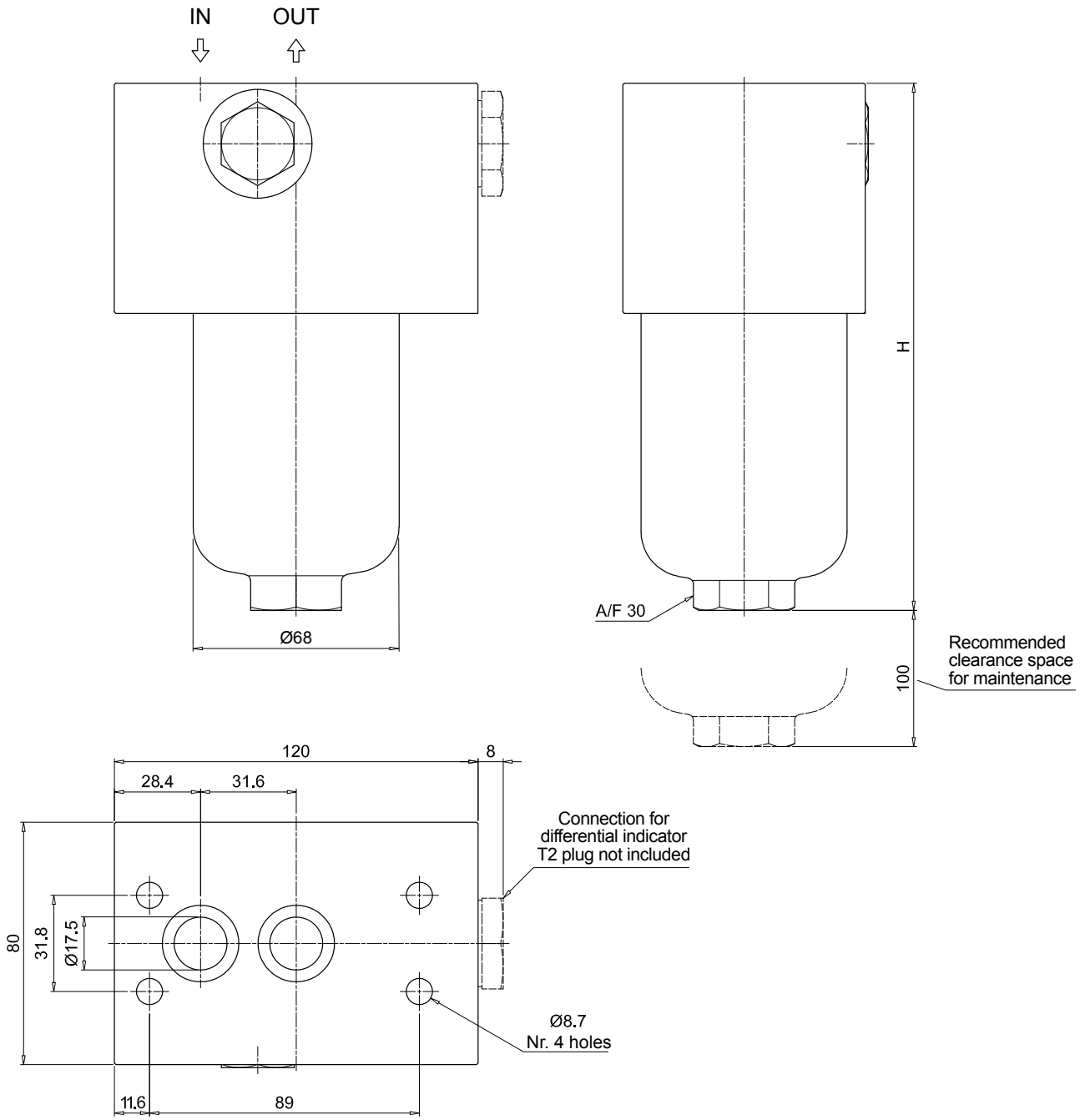

Dimensions

FHM135	
Filter length	**H [mm]**
1	202
2	315
3	390

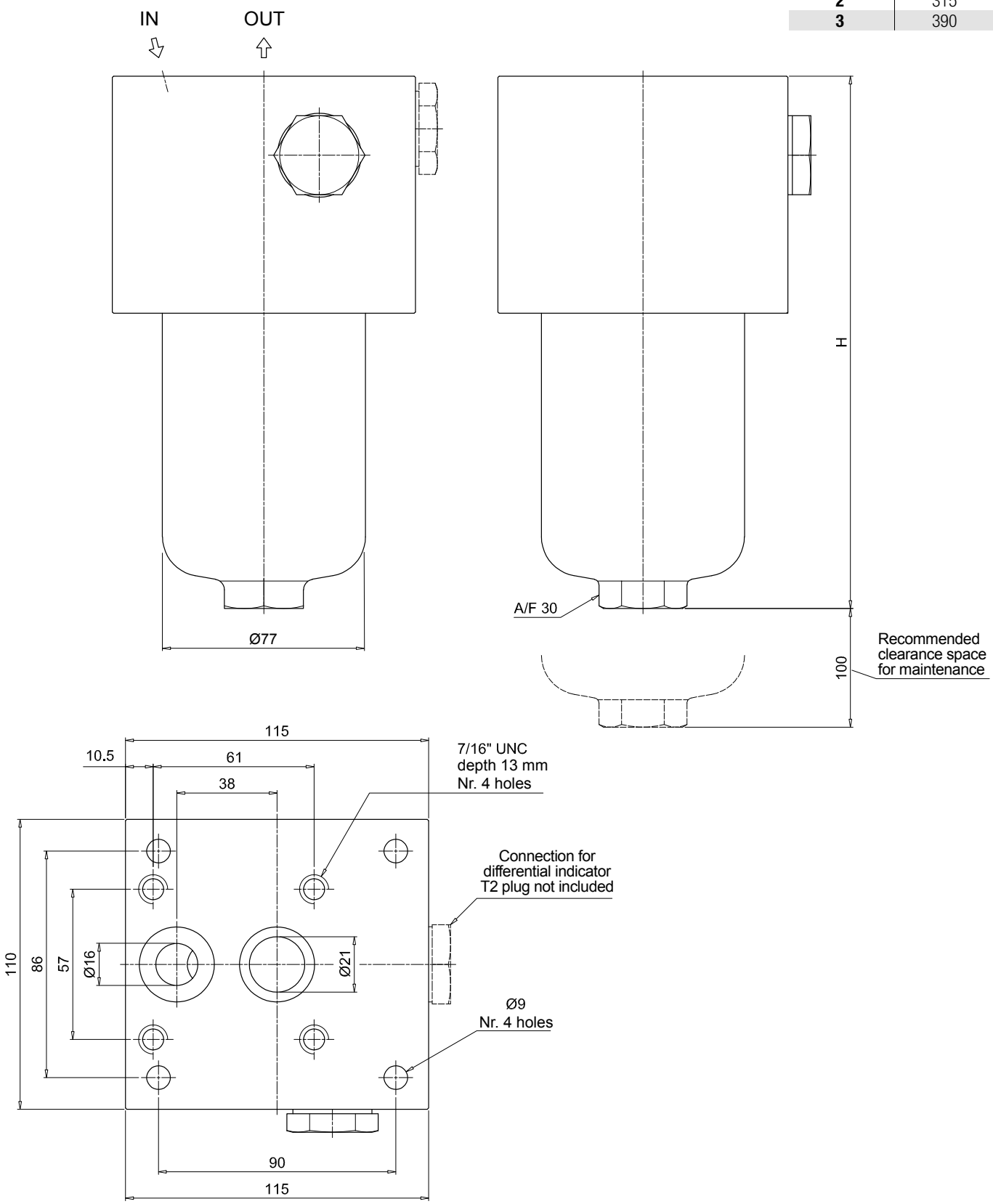

FHM FHM320 - FHM500

Designation & Ordering code

COMPLETE FILTER

Configuration example: FHM320 | 4 | D | A | F1 | A06 | N | P01

Series and size

FHM320 | **FHM500**

Length	FHM320	FHM500
1	•	•
2	•	•
3	•	•
4	•	•
5		•

Valves

S	Without bypass
B	With bypass 6 bar
T	With check valve, without bypass
D	With check valve, with bypass 6 bar

Seals

A	NBR
V	FPM

Connections

F1	Manifold

Filtration rating (filter media)

A03	Inorganic microfiber	3 µm	**A16**	Inorganic microfiber	16 µm
A06	Inorganic microfiber	6 µm	**A25**	Inorganic microfiber	25 µm
A10	Inorganic microfiber	10 µm	**M25**	Wire mesh	25 µm

Valves:		FHM320				FHM500			
Element Δp		S	B	T	D	S	B	T	D
N	20 bar		•		•		•		•
H	210 bar	•		•					
S	210 bar					•		•	

Execution		Filter length 1	2	3	4	5
P01	MP Filtri standard	•	•	•	•	•
P02	Maintenance from the bottom of the housing				•	•
Pxx	Customized					

FILTER ELEMENT

Configuration example: HP320 | 4 | A06 | A | N | P01

Element series and size

HP320 | **HP500**

Element length	HP320	HP500
1	•	•
2	•	•
3	•	•
4	•	•
5		•

Filtration rating (filter media)

A03	Inorganic microfiber	3 µm	**A16**	Inorganic microfiber	16 µm
A06	Inorganic microfiber	6 µm	**A25**	Inorganic microfiber	25 µm
A10	Inorganic microfiber	10 µm	**M25**	Wire mesh	25 µm

Seals	
A	NBR
V	FPM

Element Δp		HP320	HP500
N	20 bar	•	•
H	210 bar	•	
S	210 bar		•

Execution	
P01	MP Filtri standard
Pxx	Customized

ACCESSORIES

Differential indicators		page
DEA	Electrical differential indicator	577
DEH	Hazardous area electronic differential indicator	577-578
DEM	Electrical differential indicator	578-579
DLA	Electrical / visual differential indicator	579-580
DLE	Electrical / visual differential indicator	580
DTA	Electronic differential indicator	581
DVA	Visual differential indicator	581
DVM	Visual differential indicator	581

Additional features		page
T2	Plug	582

Dimensions

FHM320			
Filter length	H [mm]	H2 [mm] Execution P01	H2 [mm] Execution P02
1	293	150	-
2	416	150	-
3	548	150	-
4	702	150	550

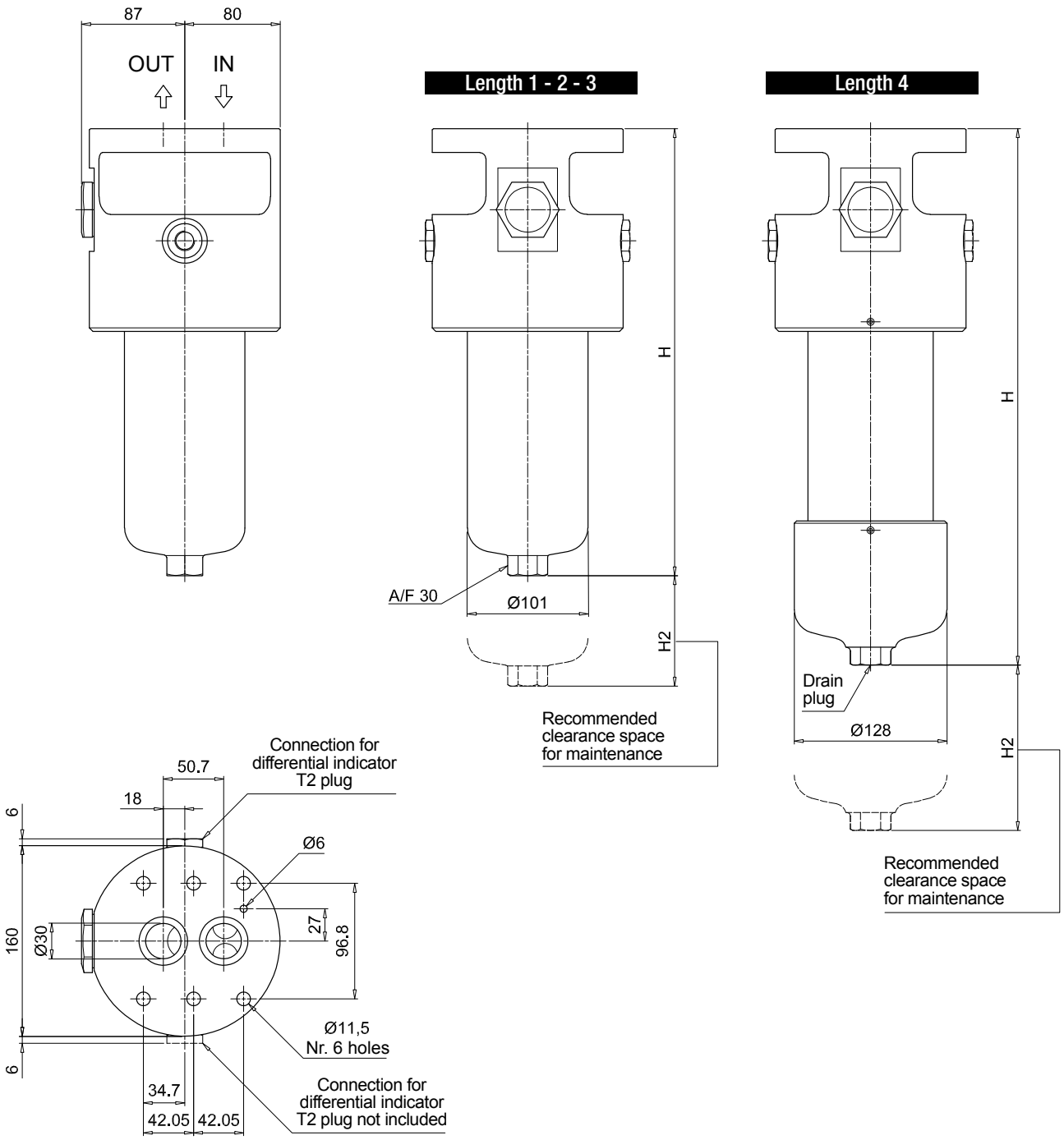

Dimensions

FHM500			
Filter length	H [mm]	H2 [mm] Execution P01	H2 [mm] Execution P02
1	355	150	-
2	445	150	-
3	521	150	-
4	679	150	480
5	845	150	650

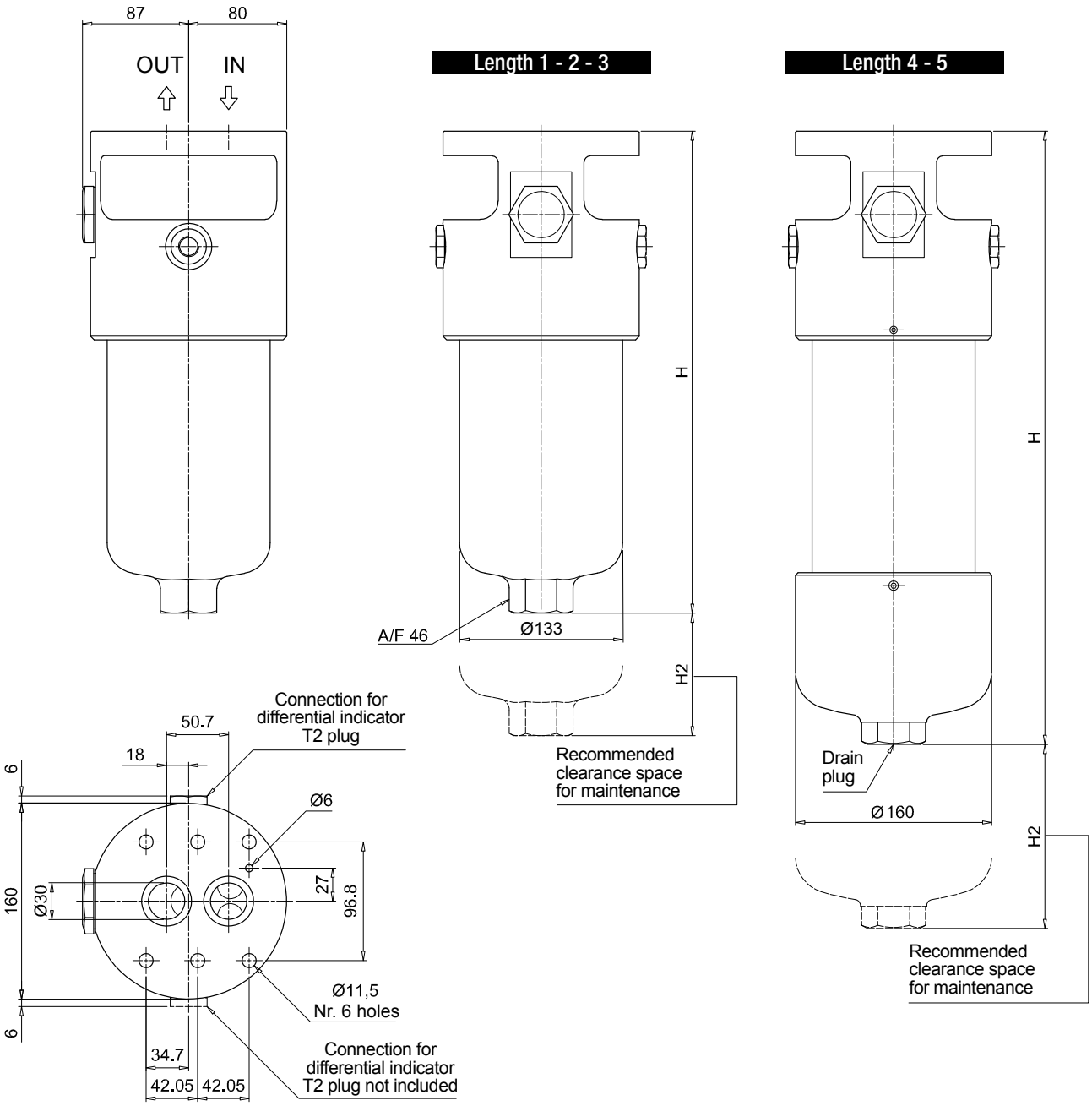

Order number for spare parts

FHM 006 - 007 - 010

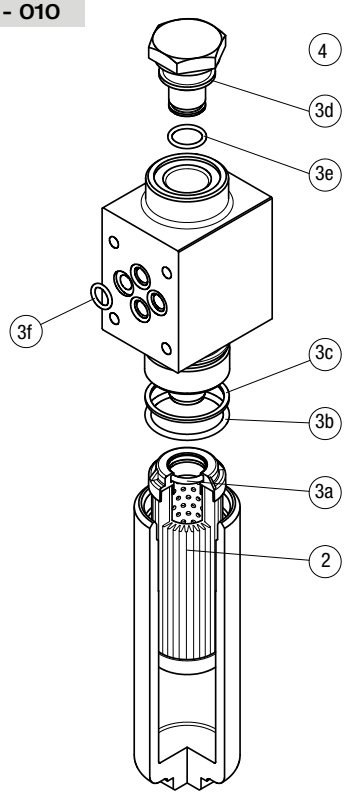

Item:	Q.ty: 1 pc. 2	Q.ty: 1 pc. 3 (3a ÷ 3f)		Q.ty: 1 pc. 4	
Filter series	Filter element	Seal Kit code number NBR	FPM	Indicator connection plug NBR	FPM
FHM 006	See order table	02050324	02050325	T2H	T2V
FHM 007		02050600	02050601		
FHM 010		02050320	02050321		

FHM 050 - 065 - 135 - 320 - 500

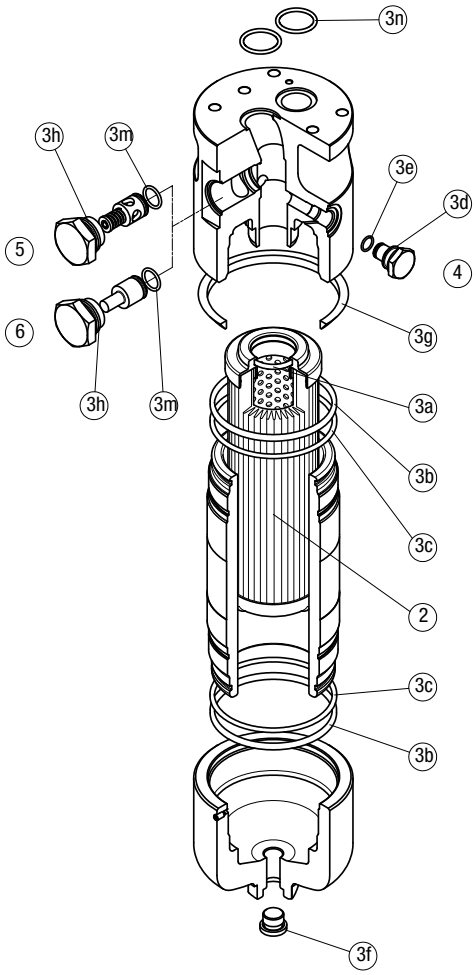

Item:	Q.ty: 1 pc. 2	Q.ty: 1 pc. 3 (3a ÷ 3m)		Q.ty: 1 pc. 4		Q.ty: 1 pc. 5		Q.ty: 1 pc. 6	
Filter series	Filter element	Seal Kit code number NBR	FPM	Indicator connection plug NBR	FPM	Bypass assembly NBR	FPM	Non-bypass assembly NBR	FPM
FHM 050	See order table	02050410	02050411	T2H	T2V	02001400	02001401	02001402	02001403
FHM 065		02050268	02050279			02001400	02001401	02001402	02001403
FHM 135		02050271	02050282			02001404	02001405	02001406	02001407
FHM 320		02050275	02050286			02001408	02001409	02001410	02001411
FHM 500		02050332	02050333			02001408	02001409	02001410	02001411

FHB series

Maximum working pressure up to 32 MPa (320 bar) - Flow rate up to 485 l/min

FHB GENERAL INFORMATION

Description

High Pressure filters

Manifold
Maximum working pressure up to 32 MPa (320 bar)
Flow rate up to 485 l/min

FHB is a range of high pressure filter for protection of sensitive components in high pressure hydraulic systems in the mobile machines. They are directly connected to the side of the manifold, through the proper flanged interface.

Available features:
- Manifold connections up to Ø30 mm, for a maximum flow rate of 485 l/min
- Fine filtration rating, to get a good cleanliness level into the system
- Bypass valve, to relieve excessive pressure drop across the filter media
- Check valve, to protect the system against reverse flow
- Low collapse filter element "N", for use with filters provided with bypass valve
- High collapse filter element "H", for use with filters not provided with bypass valve
- High collapse filter element with external support "S", for filter element protection against the back pressure caused by the check valve in filters not provided with the bypass valve
- Visual, electrical and electronic differential clogging indicators

Common applications:
Delivery lines, in any high pressure industrial equipment or mobile machines

Technical data

Filter housing materials
- Head: Phosphatized cast iron
- Housing: Phosphatized steel
- Bypass valve: Steel
- Check valve: Steel

Pressure
- Working pressure: 32 MPa (320 bar)
- Test pressure: 48 MPa (480 bar)
- Burst pressure: 96 MPa (960 bar)
- Pulse pressure fatigue test: 1 000 000 cycles with pressure from 0 to 32 MPa (320 bar)

Bypass valve
- Opening pressure 600 kPa (6 bar) ±10%
- Other opening pressures on request.

Δp element type
- Microfibre filter elements - series N: 20 bar
- Microfibre filter elements - series H: 210 bar (not available for FHB050)
- Microfibre filter elements - series S: 210 bar (only for FHB050)
- Wire mesh filter elements - series N: 20 bar
- Fluid flow through the filter element from OUT to IN

Seals
- Standard NBR series A
- Optional FPM series V

Temperature
From -25 °C to +110 °C

Connections
Manifold mounting

Note
FHB filters are provided for vertical mounting

Weights [kg] and volumes [dm³]

Filter series	Weights [kg]						Volumes [dm³]					
	Length	1	2	3	4	5	Length	1	2	3	4	5
FHB 050		2.61	2.98	3.39	3.86	5.04		0.21	0.30	0.40	0.52	0.81
FHB 065		3.33	3.69	4.90	-	-		0.20	0.27	0.49	-	-
FHB 135		6.61	8.21	9.21	-	-		0.40	0.73	0.94	-	-
FHB 320		12.95	15.08	17.37	26.77	-		0.91	1.63	2.40	3.59	-

FILTER ASSEMBLY SIZING
Flow rates [l/min]

		Filter element design - N Series						Filter element design - S Series				
Filter series	Length	A03	A06	A10	A16	A25	M25	A03	A06	A10	A16	A25
FHB 050	1	43	42	79	81	101	131	30	40	58	60	74
	2	53	58	84	93	112	132	46	50	76	86	108
	3	67	70	94	101	119	133	59	62	87	95	115
	4	82	87	106	108	122	134	74	80	101	103	119
	5	102	104	119	122	127	136	90	92	105	113	126

		Filter element design - N Series						Filter element design - H Series				
Filter series	Length	A03	A06	A10	A16	A25	M25	A03	A06	A10	A16	A25
FHB 065	1	25	33	55	62	87	133	23	25	49	58	81
	2	33	51	70	76	101	134	33	38	66	75	94
	3	60	71	97	103	118	138	60	68	95	102	116
FHB 135	1	67	72	120	129	177	212	49	55	97	100	160
	2	109	116	152	154	224	250	90	110	137	140	182
	3	153	155	201	205	226	253	126	142	175	187	207
FHB 320	1	130	143	238	286	343	442	110	117	192	201	304
	2	259	281	391	409	454	468	200	230	319	325	392
	3	332	368	441	455	463	476	269	312	381	389	432
	4	368	390	446	462	481	488	311	334	388	394	437

Maximum flow rate for a complete pressure filter with a pressure drop Δp = 1.5 bar.
The reference fluid has a kinematic viscosity of 30 mm^2/s (cSt) and a density of 0.86 kg/dm^3.
For different pressure drop or fluid viscosity we recommend to use our selection software available on www.mpfiltri.com.
You can also calculate the right size using the formulas present on the FILTER SIZING paragraph at the beginning of the full catalogue or at the beginning of the filter family brochure.
Please, contact our Sales Department for further additional information.

Hydraulic symbols

Filter series	Style S	Style B	Style T	Style D
FHB 050	•	•	•	•
FHB 065	•	•	•	•
FHB 135	•	•	•	•
FHB 320				

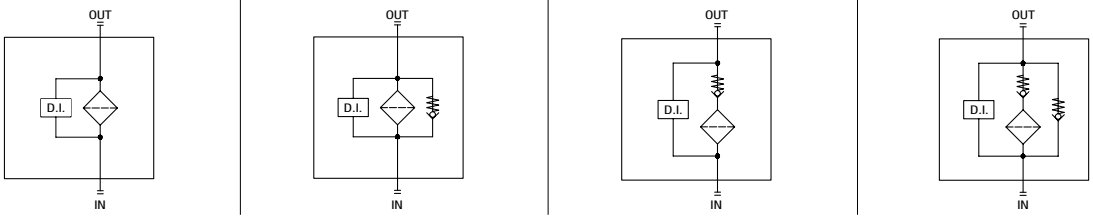

Pressure drop

Filter housings Δp pressure drop

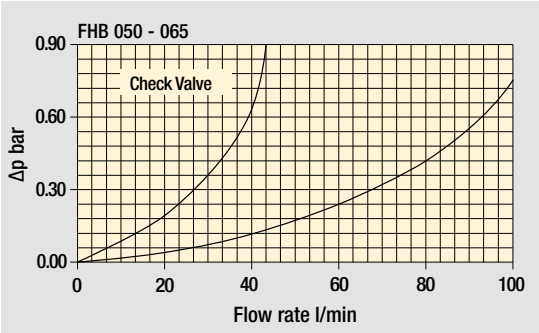

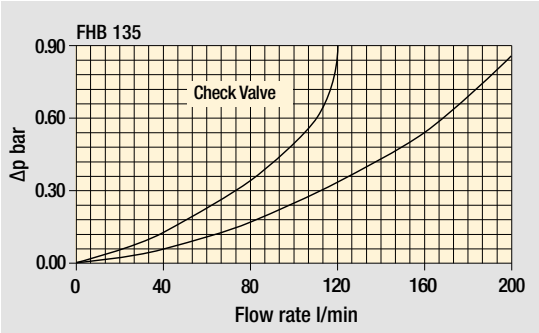

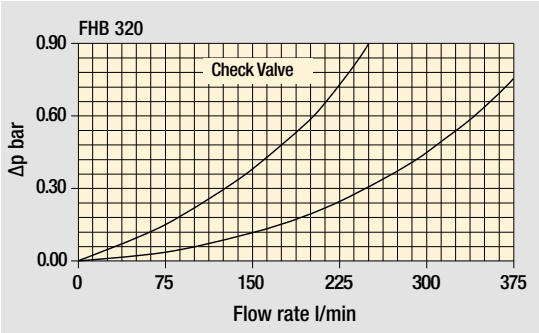

Bypass valve pressure drop

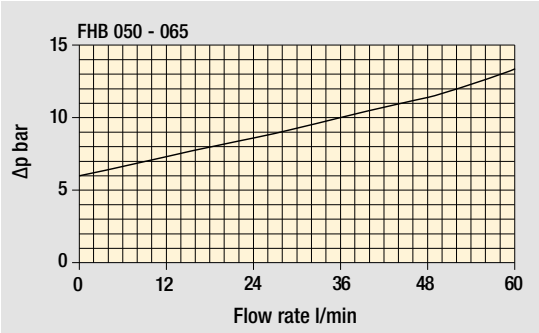

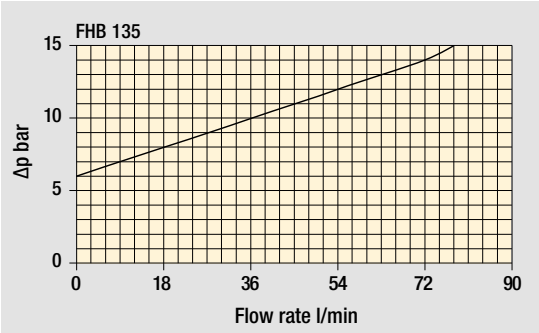

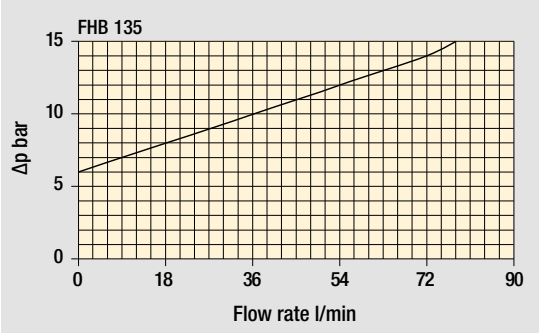

The curves are plotted using mineral oil with density of 0.86 kg/dm^3 in compliance with ISO 3968. Δp varies proportionally with density.

FHB FHB050

Designation & Ordering code

COMPLETE FILTER

Configuration example: FHB050 | 2 | T | A | F1 | A06 | S | P01

Series and size
FHB050

Length
1 | 2 | 3 | 4 | 5

Valves
S Without bypass
B With bypass 6 bar
T With check valve, without bypass
D With check valve, with bypass 6 bar

Seals
A NBR
V FPM

Connections
F1 Manifold

Filtration rating (filter media)

A03	Inorganic microfiber	3 µm	**A16**	Inorganic microfiber	16 µm
A06	Inorganic microfiber	6 µm	**A25**	Inorganic microfiber	25 µm
A10	Inorganic microfiber	10 µm	**M25**	Wire mesh	25 µm

Element Δp		Valves S	Valves B	Valves T	Valves D
N	20 bar		•		•
S	210 bar	•		•	

Execution	
P01	MP Filtri standard
Pxx	Customized

FILTER ELEMENT

Configuration example: HP050 | 2 | A06 | A | S | P01

Element series and size
HP050

Element length
1 | 2 | 3 | 4 | 5

Filtration rating (filter media)

A03	Inorganic microfiber	3 µm	**A16**	Inorganic microfiber	16 µm
A06	Inorganic microfiber	6 µm	**A25**	Inorganic microfiber	25 µm
A10	Inorganic microfiber	10 µm	**M25**	Wire mesh	25 µm

Seals
A NBR
V FPM

Element Δp
N 20 bar
S 210 bar

Execution
P01 MP Filtri standard
Pxx Customized

ACCESSORIES

Differential indicators		page
DEA	Electrical differential indicator	577
DEH	Hazardous area electronic differential indicator	577-578
DEM	Electrical differential indicator	578-579
DLA	Electrical / visual differential indicator	579-580
DLE	Electrical / visual differential indicator	580
DTA	Electronic differential indicator	581
DVA	Visual differential indicator	581
DVM	Visual differential indicator	581

Additional features		page
T2	Plug	582

Dimensions

FHB050	
Filter length	**H [mm]**
1	185
2	222
3	264
4	312
5	434

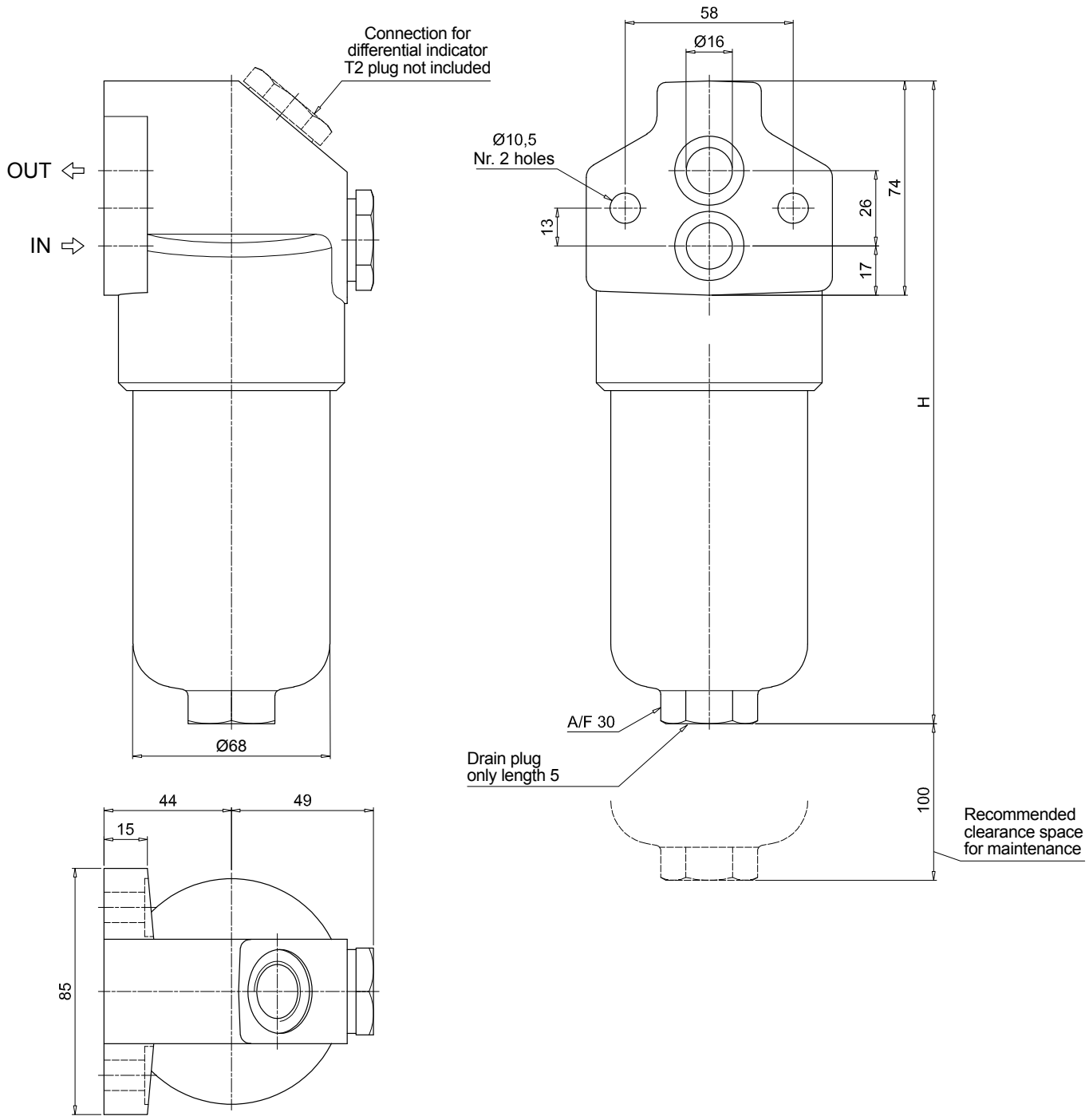

FHB FHB065 - FHB135 - FHB320

Designation & Ordering code

COMPLETE FILTER

Configuration example: FHB320 | 4 | S | A | F1 | A06 | H | P01

Series and size

FHB065 | **FHB135** | **FHB320**

Length	FHB065	FHB135	FHB320
1	•	•	•
2	•	•	•
3	•	•	•
4			•

Valves

S	Without bypass
B	With bypass 6 bar
T	With check valve, without bypass
D	With check valve, with bypass 6 bar

Seals

A	NBR
V	FPM

Connections

F1	Manifold

Filtration rating (filter media)

A03	Inorganic microfiber	3 µm	**A16**	Inorganic microfiber	16 µm
A06	Inorganic microfiber	6 µm	**A25**	Inorganic microfiber	25 µm
A10	Inorganic microfiber	10 µm	**M25**	Wire mesh	25 µm

Element Δp		Valves S	B	T	D
N	20 bar		•		•
H	210 bar	•		•	

Execution		1	2	3	4
P01	MP Filtri standard	•	•	•	•
P02	Maintenance from the bottom of the housing				•
Pxx	Customized				

FILTER ELEMENT

Configuration example: HP320 | 4 | A06 | A | H | P01

Element series and size

HP065 | **HP135** | **HP320**

Element length	HP065	HP135	HP320
1	•	•	•
2	•	•	•
3	•	•	•
4			•

Filtration rating (filter media)

A03	Inorganic microfiber	3 µm	**A16**	Inorganic microfiber	16 µm
A06	Inorganic microfiber	6 µm	**A25**	Inorganic microfiber	25 µm
A10	Inorganic microfiber	10 µm	**M25**	Wire mesh	25 µm

Seals

A	NBR
V	FPM

Element Δp

N	20 bar
H	210 bar

Execution

P01	MP Filtri standard
Pxx	Customized

ACCESSORIES

Differential indicators

		page
DEA	Electrical differential indicator	577
DEH	Hazardous area electronic differential indicator	577-578
DEM	Electrical differential indicator	578-579
DLA	Electrical / visual differential indicator	579-580
DLE	Electrical / visual differential indicator	580
DTA	Electronic differential indicator	581
DVA	Visual differential indicator	581
DVM	Visual differential indicator	581

Additional features

		page
T2	Plug	582

Dimensions

FHB065	
Filter length	**H [mm]**
1	194
2	225
3	327

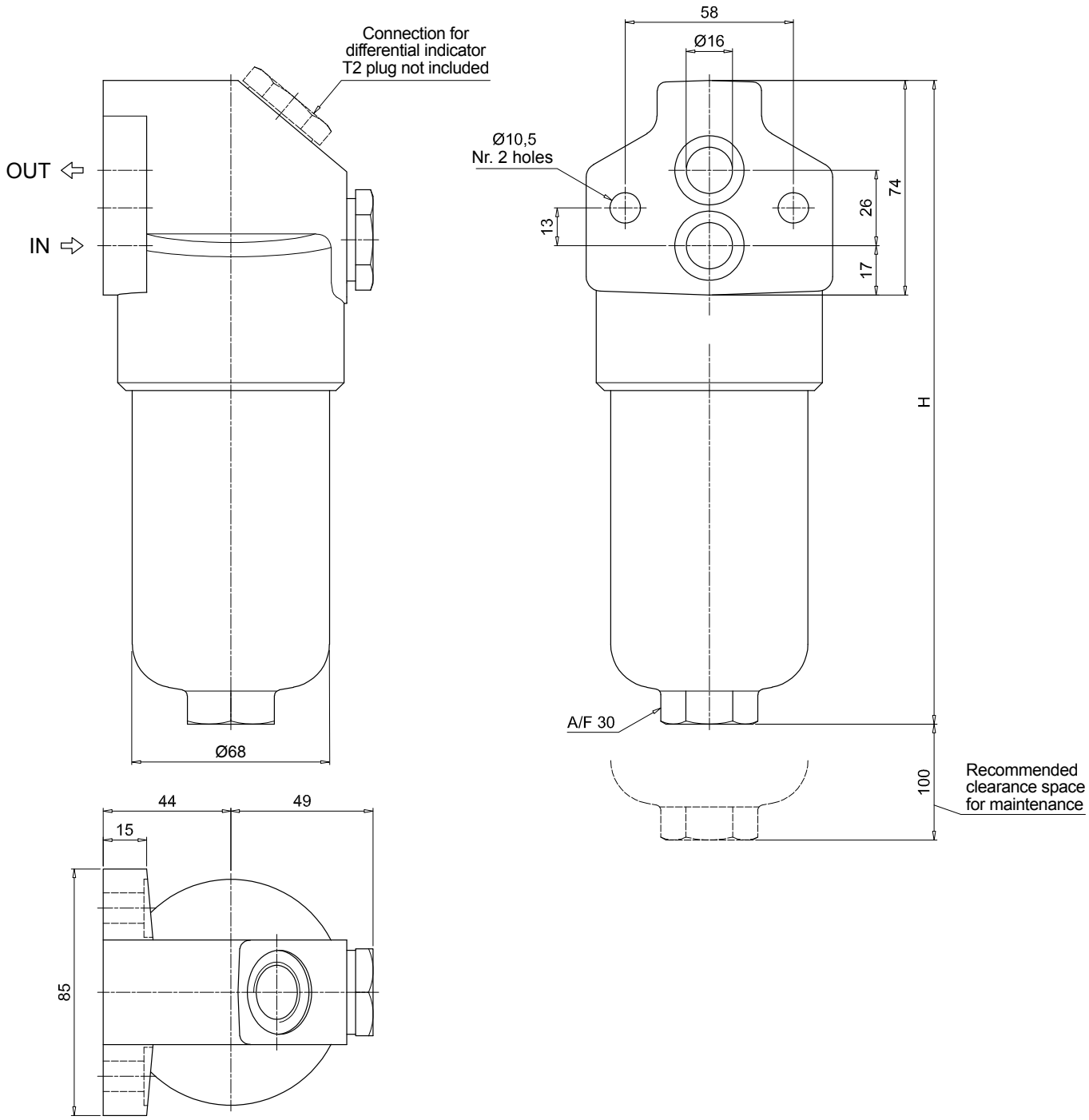

Dimensions

FHB135	
Filter length	**H [mm]**
1	268
2	381
3	456

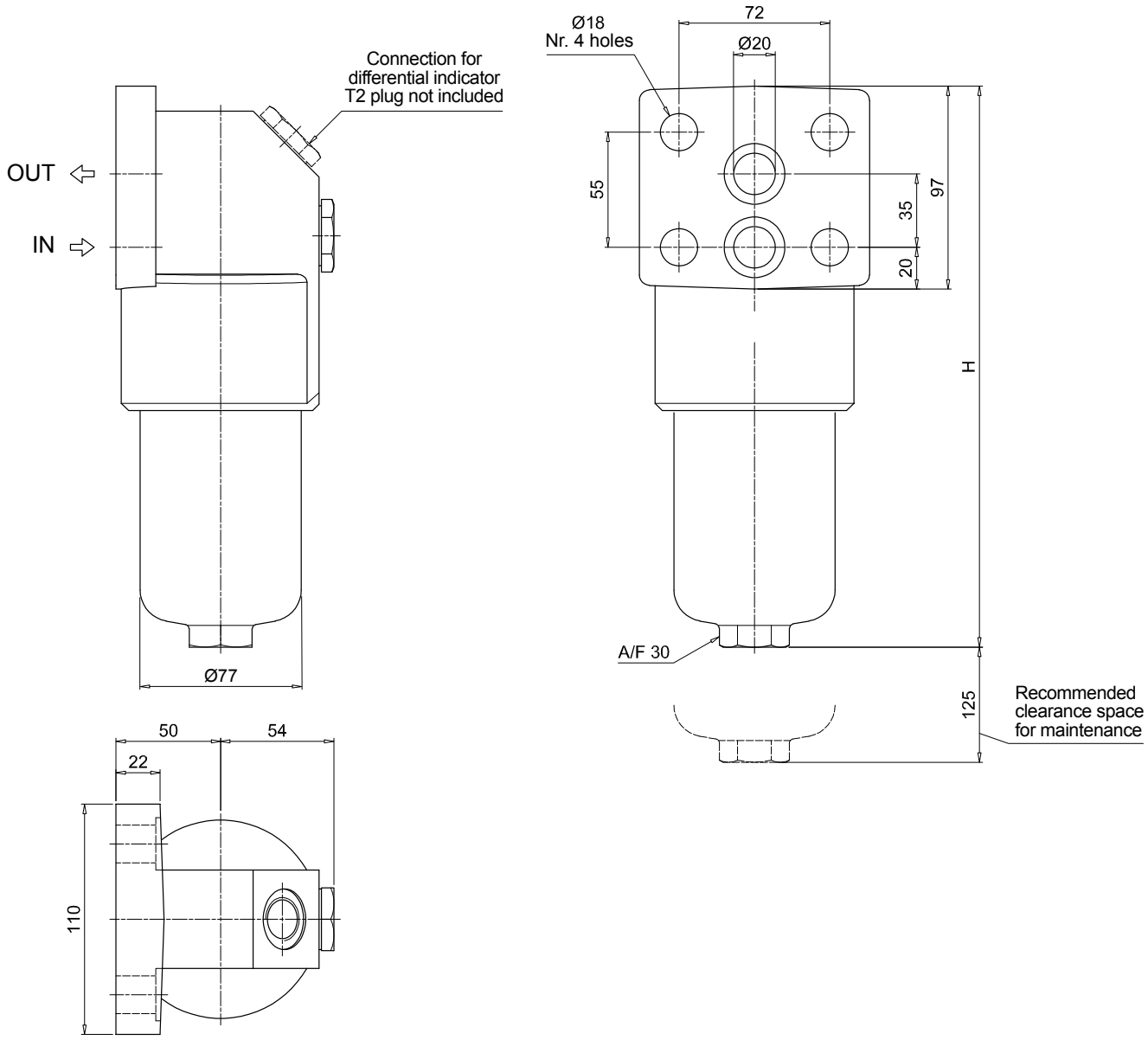

Dimensions

FHB320

Filter length	H [mm]	H2 [mm] Execution P01	H2 [mm] Execution P02
1	301	150	-
2	424	150	-
3	556	150	-
4	709	150	550

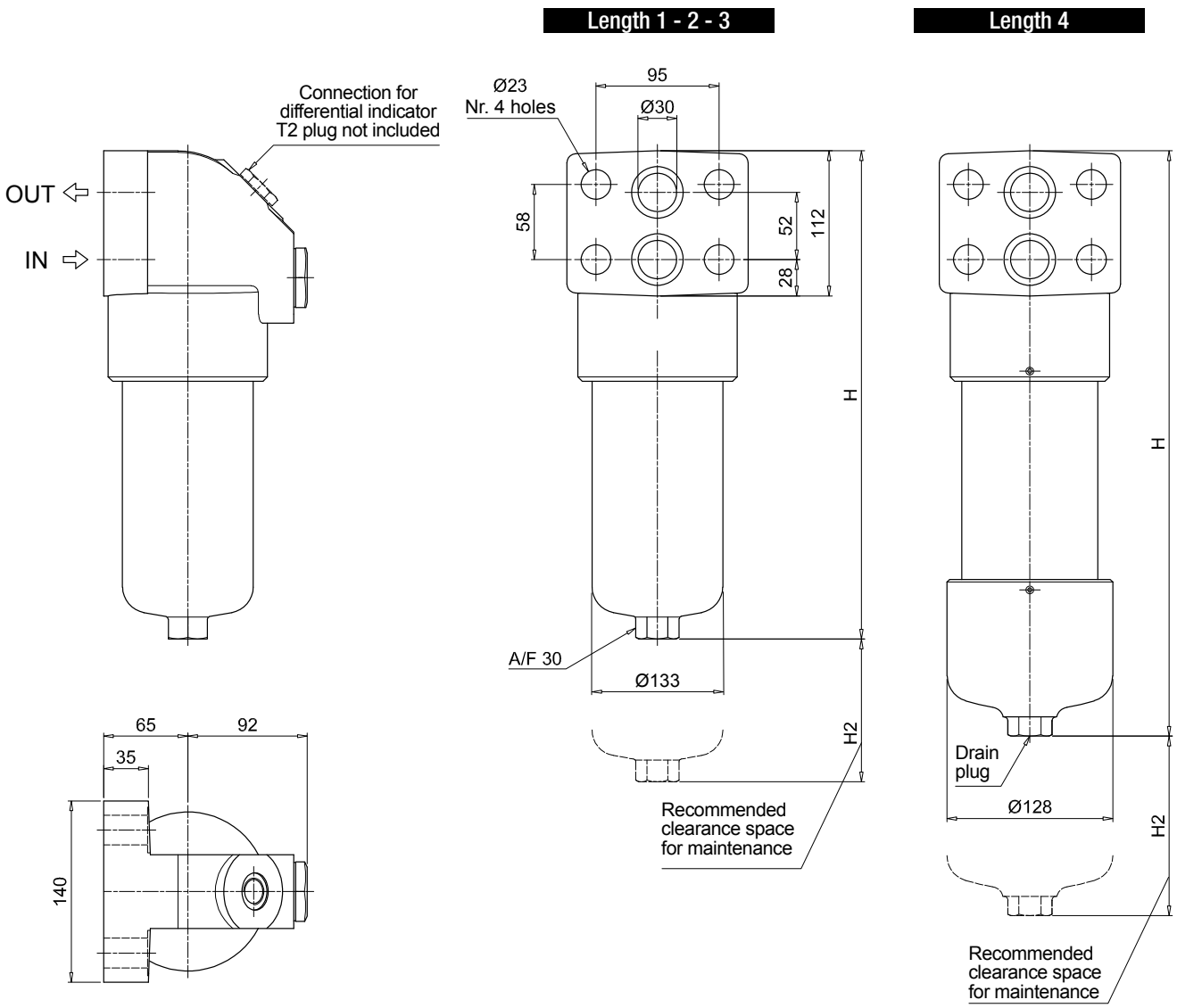

Order number for spare parts

FHB 050 - 065 - 135 - 320

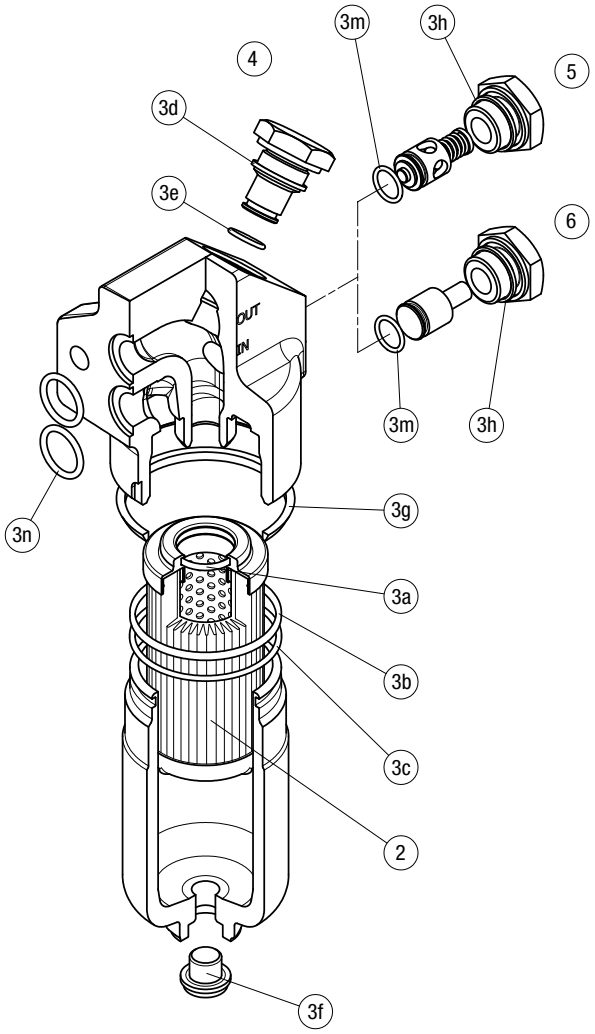

Item:	Q.ty: 1 pc. 2	Q.ty: 1 pc. 3 (3a ÷ 3n)		Q.ty: 1 pc. 4		Q.ty: 1 pc. 5		Q.ty: 1 pc. 6	
Filter series	**Filter element**	**Seal Kit code number NBR**	**FPM**	**Indicator connection plug NBR**	**FPM**	**Bypass assembly NBR**	**FPM**	**Non-bypass assembly NBR**	**FPM**
FHB 050	See order table	02050412	02050413	T2H	T2V	02001312	02001385	02001314	02001386
FHB 065		02050266	02050277			02001312	02001385	02001314	02001386
FHB 135		02050270	02050281			02001312	02001385	02001314	02001386
FHB 320		02050273	02050284			02001381	02001382	02001383	02001384

FHF 325 series

Maximum working pressure up to 35 MPa (350 bar) - Flow rate up to 550 l/min

Filter housing according to SAE J2066 for HF4 filter elements

FHF 325 GENERAL INFORMATION

Filter housing according to SAE J2066 for HF4 filter elements

Description

High Pressure filters

Manifold
Maximum working pressure up to 35 MPa (350 bar)
Flow rate up to 550 l/min

FHF is a range of high pressure filter for protection of sensitive components in high pressure hydraulic systems in the mobile machines. They are directly connected to the lines of the system through the hydraulic fittings or the proper flanged interface.

Available features:
- 1 1/2" female threaded connections, 1 1/2" flanged connections and manifold connections up to 1 1/2", for a maximum flow rate of 550 l/min
- Base-mounting design, for ease of the replacement of the filter element
- Filter element designed in accordance with SAE J2066 HF4 regulation
- Fine filtration rating, to get a good cleanliness level into the system
- Bypass valve, to relieve excessive pressure drop across the filter media
- Low collapse filter element "N", for use with filters provided with bypass valve
- Visual, electrical and electronic differential clogging indicators

Common applications:
Delivery lines, in any high pressure industrial equipment

Technical data

Filter housing materials
- Head: Phosphatized cast iron
- Housing: Phosphatized steel
- Cover: Cast iron (chemical heat treatment)
- Bypass valve: Brass - Steel

Pressure
- Working pressure: 35 MPa (350 bar)
- Test pressure: 52.5 MPa (525 bar)
- Burst pressure: 105 MPa (1050 bar)
- Pulse pressure fatigue test: 1 000 000 cycles with pressure from 0 to 35 MPa (350 bar)

Bypass valve
- Opening pressure 600 kPa (6 bar) ±10%
- Other opening pressures on request.

Δp element type
- Microfibre filter elements - series N: 20 bar
- Wire mesh filter elements - series N: 20 bar
- Fluid flow through the filter element from OUT to IN

Seals
- Standard NBR series A
- Optional FPM series V

Temperature
From -25 °C to +110 °C

Connections
FHF 325: In-line threaded connection
FHF 325: In-line flanged connection
FHF 325: Manifold mounting

Note
FHF filters are provided for vertical mounting

Weights [kg] and volumes [dm³]

Filter series	Weights [kg]				Volumes [dm³]			
	Length	1	2	3	Length	1	2	3
FHF 325		23.90	32.68	41.47		3.50	5.80	8.11

Filter housing according to SAE J2066 for HF4 filter elements

FILTER ASSEMBLY SIZING
Flow rates [l/min]

Filter series	Length	Filter element design - N Series					
		A03	A06	A10	A16	A25	M25
FHF 325	1	302	339	348	419	500	556
	2	401	424	434	457	505	557
	3	416	451	460	469	510	559

Maximum flow rate for a complete pressure filter with a pressure drop Δp = 1.5 bar.
The reference fluid has a kinematic viscosity of 30 mm^2/s (cSt) and a density of 0.86 kg/dm^3.
For different pressure drop or fluid viscosity we recommend to use our selection software available on www.mpfiltri.com.
You can also calculate the right size using the formulas present on the FILTER SIZING paragraph at the beginning of the full catalogue or at the beginning of the filter family brochure.
Please, contact our Sales Department for further additional information.

Hydraulic symbols

Filter series	Style S	Style B
FHF 325	•	•

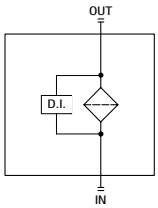

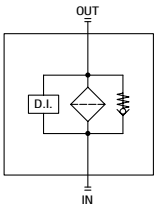

Pressure drop
Filter housings Δp pressure drop

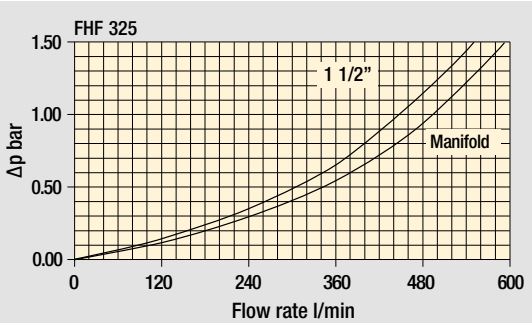

The curves are plotted using mineral oil with density of 0.86 kg/dm^3 in compliance with ISO 3968. Δp varies proportionally with density.

FHF 325

Designation & Ordering code

COMPLETE FILTER

Configuration example: FHF325 | 2 | S | A | H | 7 | A10 | N | P01

Series and size
FHF325

Length
1 | **2** | **3** |

Valves
S Without bypass
B With bypass 6 bar

Seals
A NBR
V FPM

Connections
A G 1 1/2”
B 1 1/2” NPT
C SAE 24 - 1 7/8” - 12 UN
G 1 1/2” SAE 6000 psi/M
H 1 1/2” SAE 6000 psi/UNC
M Manifold ø1.38”
N Manifold ø1.50”

Connection for differential indicator
7 With two connections plugged on both sides

Filtration rating (filter media)

A03	Inorganic microfiber	3 µm	**A16**	Inorganic microfiber	16 µm
A06	Inorganic microfiber	6 µm	**A25**	Inorganic microfiber	25 µm
A10	Inorganic microfiber	10 µm	**M25**	Wire mesh	25 µm

Element Δp
N 20 bar

Execution
P01 MP Filtri standard
Pxx Customized

FILTER ELEMENT

Configuration example: HF325 | 2 | A10 | A | N | P01

Element series and size
HF325

Element length
1 | **2** | **3** |

Filtration rating (filter media)

A03	Inorganic microfiber	3 µm	**A16**	Inorganic microfiber	16 µm
A06	Inorganic microfiber	6 µm	**A25**	Inorganic microfiber	25 µm
A10	Inorganic microfiber	10 µm	**M25**	Wire mesh	25 µm

Seals
A NBR
V FPM

Element Δp
N 20 bar

Execution
P01 MP Filtri standard
Pxx Customized

ACCESSORIES

Differential indicators		page
DEA	Electrical differential indicator	577
DEH	Hazardous area electronic differential indicator	577-578
DEM	Electrical differential indicator	578-579
DLA	Electrical / visual differential indicator	579-580
DLE	Electrical / visual differential indicator	580
DTA	Electronic differential indicator	581
DVA	Visual differential indicator	581
DVM	Visual differential indicator	581

Additional features		page
T2	Plug	582

Dimensions

FHF325		
Connection A - B - C		
Filter length	H [mm]	H2 [mm]
1	452	250
2	690	485
3	928	725

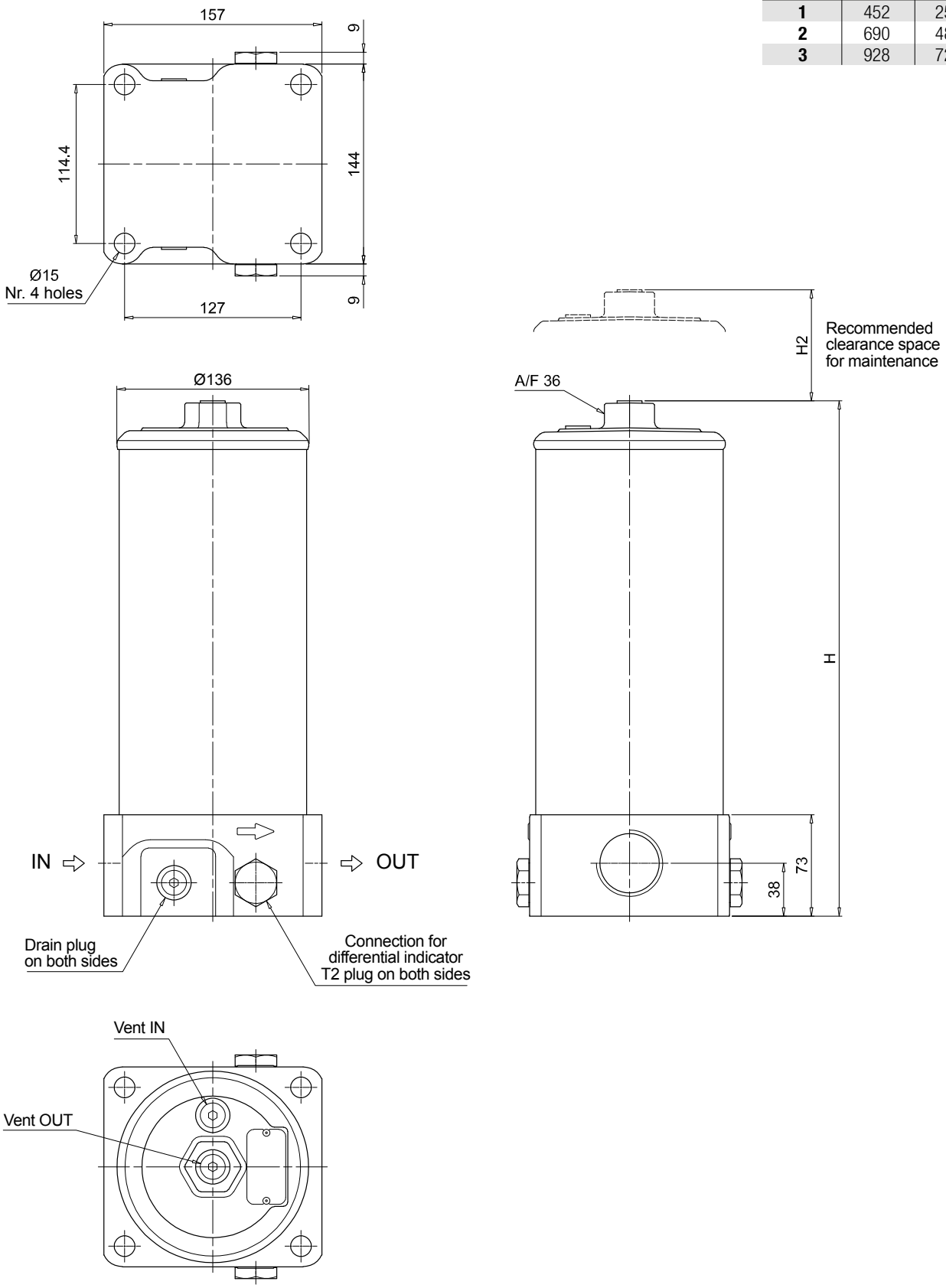

FHF 325

Dimensions

FHF325		
Connection G - H		
Filter length	H [mm]	H2 [mm]
1	463	250
2	701	485
3	939	725

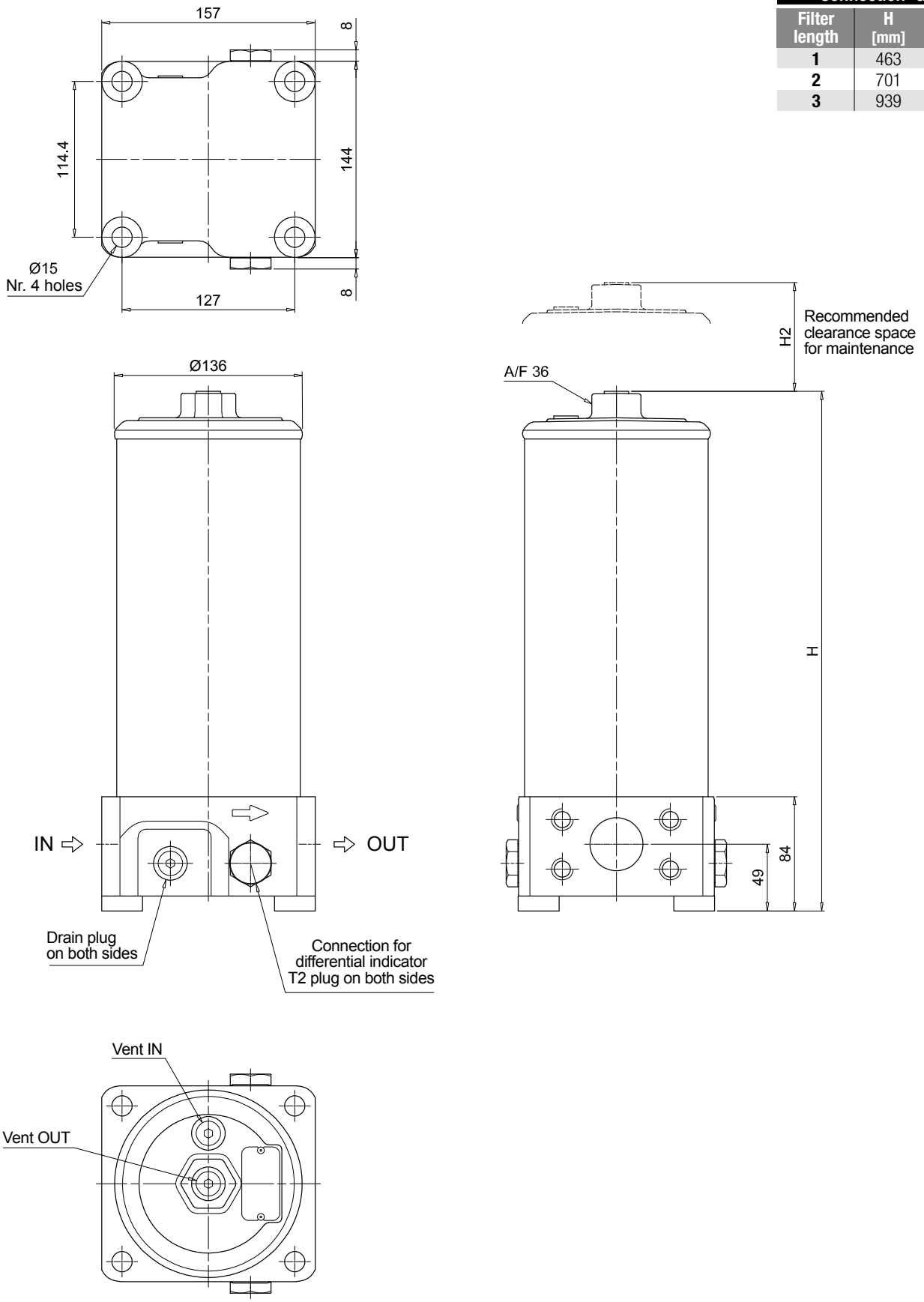

Dimensions

FHF325		
Connection M - N		
Filter length	H [mm]	H2 [mm]
1	452	250
2	690	485
3	928	725

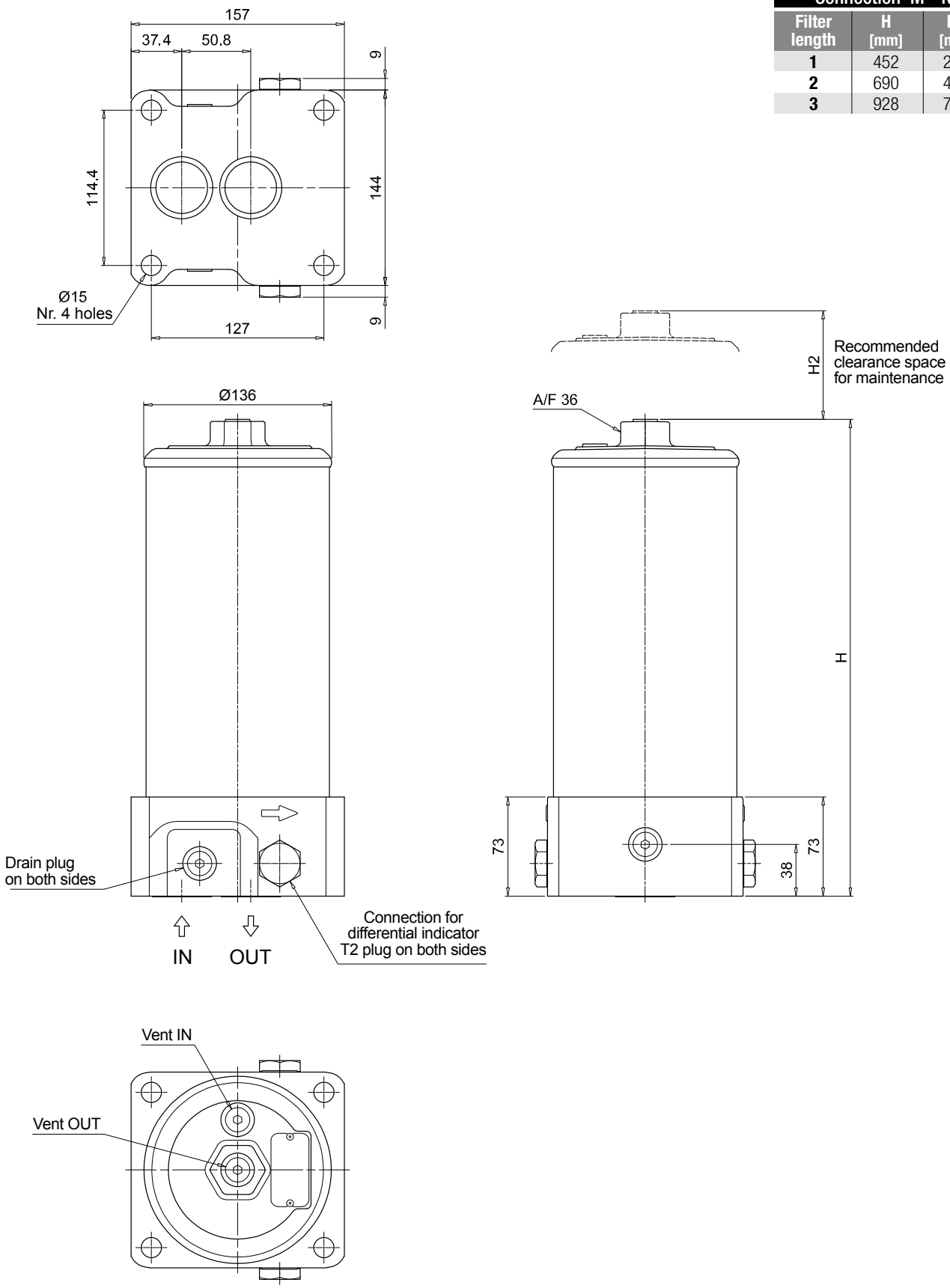

FHF 325 SPARE PARTS

Filter housing according to SAE J2066 for HF4 filter elements

Order number for spare parts

FHF 325

Connections
A - B - C - G - H

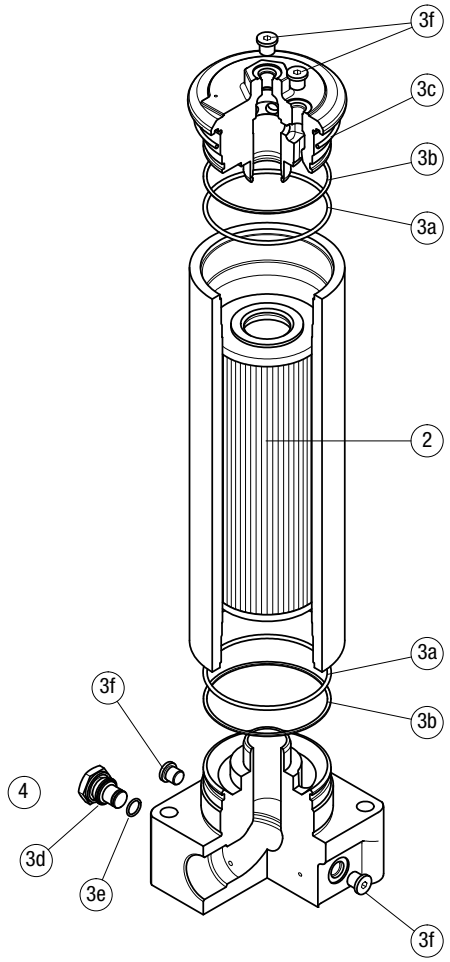

	Q.ty: 1 pc.	Q.ty: 1 pc.		Q.ty: 2 pc.	
Item:	**2**	**3** (3a ÷ 3f)		**4**	
Filter series	**Filter element**	**Seal Kit code number NBR**	**FPM**	**Indicator connection plug NBR**	**FPM**
FHF 325 A-B-C-G-H	See order table	02050588	02050589	T2H	T2V

FHF 325

Connections
M - N

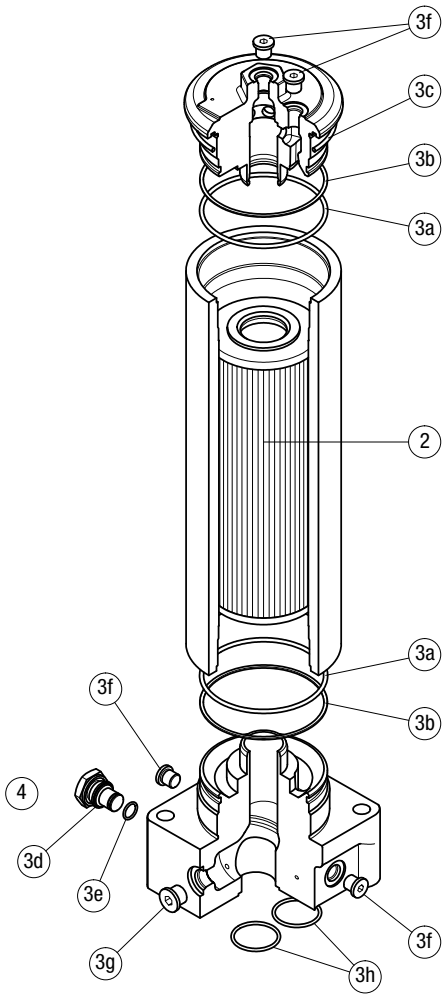

	Q.ty: 1 pc.	Q.ty: 1 pc.		Q.ty: 2 pc.	
Item:	**2**	**3** (3a ÷ 3h)		**4**	
Filter series	**Filter element**	**Seal Kit code number NBR**	**FPM**	**Indicator connection plug NBR**	**FPM**
FHF 325 M-N	See order table	02050590	02050591	T2H	T2V

FHD series

Maximum working pressure up to 35 MPa (350 bar) - Flow rate up to 250 l/min

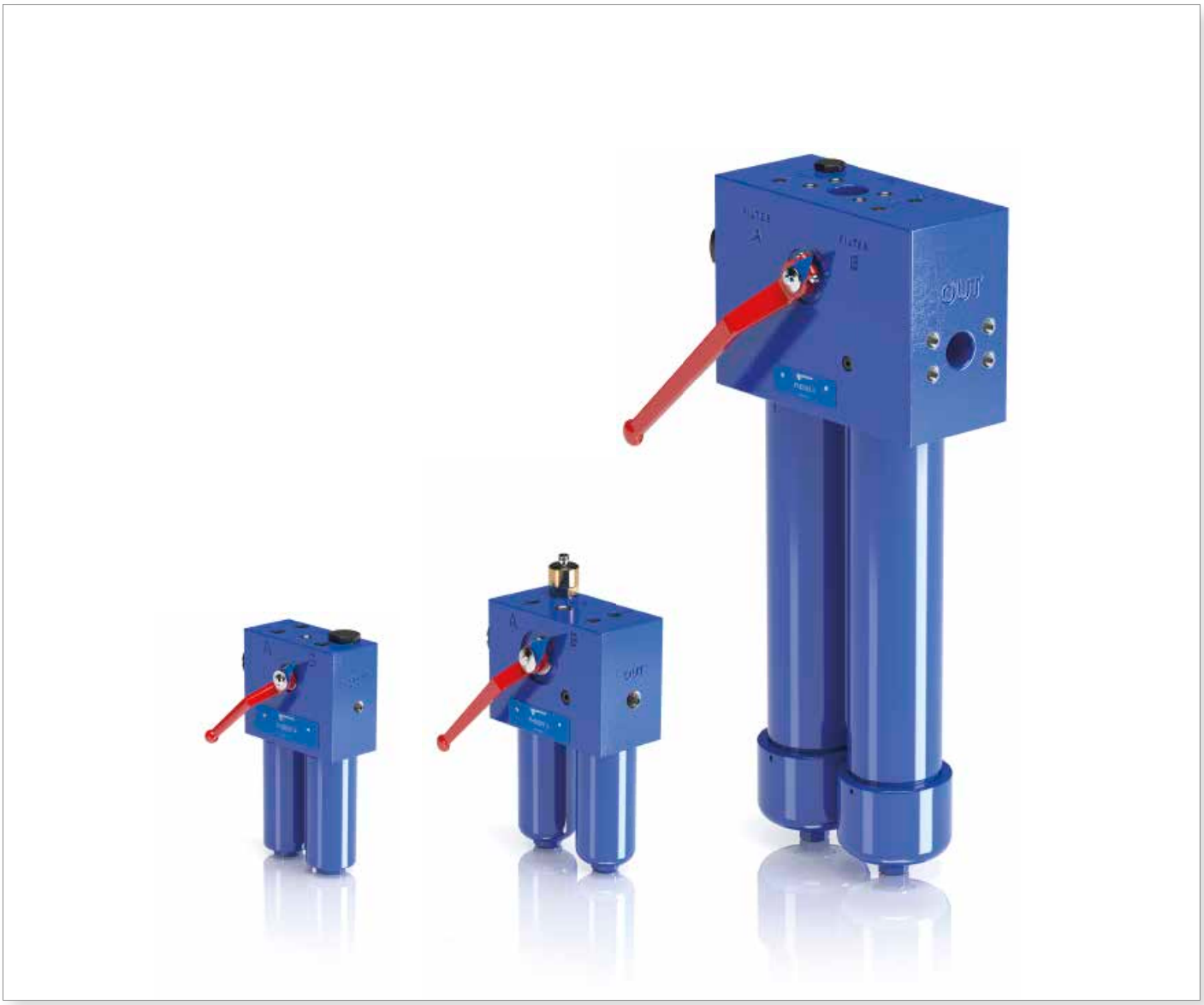

FHD GENERAL INFORMATION

Description

High Pressure filters

Duplex
Maximum working pressure up to 35 MPa (350 bar)
Flow rate up to 250 l/min

FHD is a range of high pressure duplex filter with integrated changeover function to allow the filter element replacement without the system shut-down.
They are directly connected to the lines of the system through the hydraulic fittings.

Available features:
- Female threaded connections up to 1 1/4" and flanged connections up to 1 1/2", for a maximum flow rate of 345 l/min
- Fine filtration rating, to get a good cleanliness level into the system
- Balancing valve, available for FHD051, FHD326 and FHD333, to equalize the housing pressure before the switch.
- Bypass valve, to relieve excessive pressure drop across the filter media
- Vent ports, to avoid air trapped into the filter going into the system
- Drain ports, to remove the fluid from the housing prior the maintenance work
- Low collapse filter element "N", for use with filters provided with bypass valve
- High collapse filter element "H", for use with filters not provided with bypass valve
- Low collapse filter element with external support "R", for filter element protection against the back pressure caused by the check valve or the reverse flow in filters provided with the bypass valve
- High collapse filter element with external support "S", for filter element protection against the back pressure caused by the check valve or the reverse flow in filters not provided with the bypass valve
- Visual, electrical and electronic differential clogging indicators

Common applications:
- System where shut-down causes high costs
- System where shut-down causes safety issues

Technical data

Filter housing materials
- Head: Phosphatized cast iron
- Housing: Phosphatized steel
- Bypass valve: Steel

Pressure
- Test pressure: 52.5 MPa (525 bar)
- Burst pressure: 105 MPa (1050 bar)
- Pulse pressure fatigue test: 1 000 000 cycles with pressure from 0 to 35 MPa (350 bar)

Bypass valve
- Opening pressure 600 kPa (6 bar) ±10%
- Other opening pressures on request.

Δp element type
- Microfibre filter elements - series N: 20 bar
- Microfibre filter elements - series R: 20 bar (not available for FHD 021)
- Microfibre filter elements - series H: 210 bar (only for FHD 021)
- Microfibre filter elements - series S: 210 bar (not available for FHD 021)
- Wire mesh filter elements - series N: 20 bar
- Fluid flow through the filter element from OUT to IN

Seals
- Standard NBR series A
- Optional FPM series V

Temperature
From -25 °C to +110 °C

Connections
In-line Inlet/Outlet 90°

Note
FHD filters are provided for vertical mounting

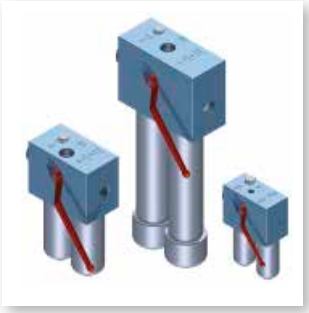

Weights [kg] and volumes [dm³]

Filter series	Weights [kg]						Volumes [dm³]					
	Length	1	2	3	4	5	Length	1	2	3	4	5
FHD 021		-	8.0	9.0	9.9	-		-	0.06	0.12	0.22	-
FHD 051		-	16.9	17.5	18.5	19.8		-	0.31	0.41	0.53	0.83
FHD 326		43.0	50.0	54.0	-	-		0.88	1.60	2.37	-	-
FHD 333		-	74.0	79.0	98.0	-		-	1.75	2.52	3.35	-

FILTER ASSEMBLY SIZING
Flow rates [l/min]

		Filter element design - H Series					
Filter series	Length	A03	A06	A10	A16	A25	M25
FHD 021	2	6	8	14	16	19	26
	3	10	12	18	20	22	27
	4	13	16	21	22	24	27

		Filter element design - R Series					N Series	Filter element design - S Series				
Filter series	Length	A03	A06	A10	A16	A25	M25	A03	A06	A10	A16	A25
FHD 051	2	39	41	51	54	59	64	35	37	48	51	58
	3	45	46	54	56	61	65	41	43	52	54	60
	4	50	52	58	58	62	65	47	49	56	56	61
	5	56	57	61	62	63	65	53	53	57	59	63
FHD 326	1	93	99	131	142	154	171	83	87	117	120	146
	2	136	141	163	166	173	176	119	128	149	151	163
	3	152	159	171	174	175	177	139	148	161	163	170
FHD 333	2	175	184	224	230	245	249	147	162	199	201	225
	3	204	217	241	245	247	252	179	196	221	224	238
	4	216	224	242	247	253	255	196	204	223	225	239

Maximum flow rate for a complete pressure filter with a pressure drop Δp = 1.5 bar.
The reference fluid has a kinematic viscosity of 30 mm^2/s (cSt) and a density of 0.86 kg/dm^3.
For different pressure drop or fluid viscosity we recommend to use our selection software available on www.mpfiltri.com.
You can also calculate the right size using the formulas present on the FILTER SIZING paragraph at the beginning of the full catalogue or at the beginning of the filter family brochure.
Please, contact our Sales Department for further additional information.

Hydraulic symbols

Filter series	Style S	Style B	Style B
FHD 021	•		
FHD 051	•	•	
FHD 326	•		•
FHD 333	•		•

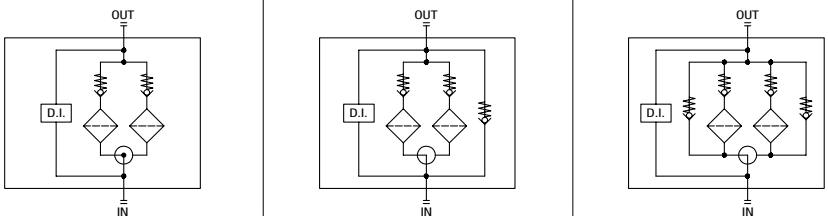

Pressure drop

Filter housings Δp pressure drop

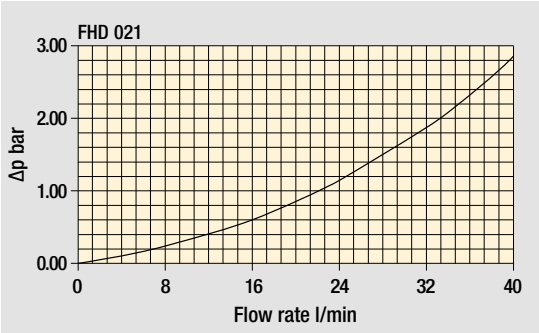

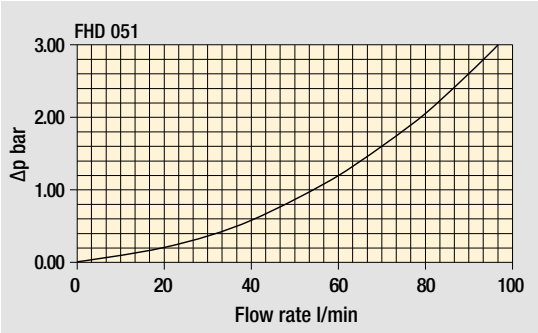

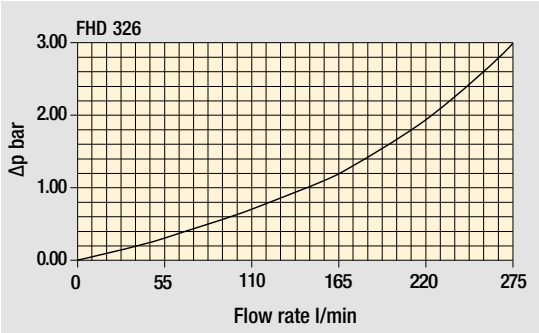

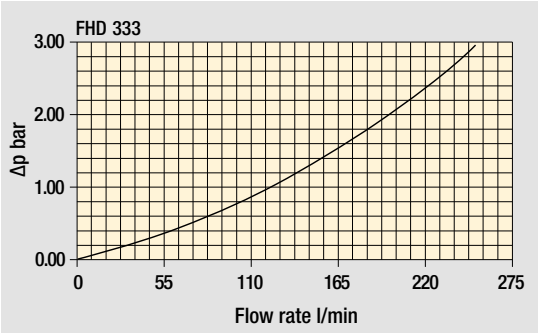

Bypass valve pressure drop

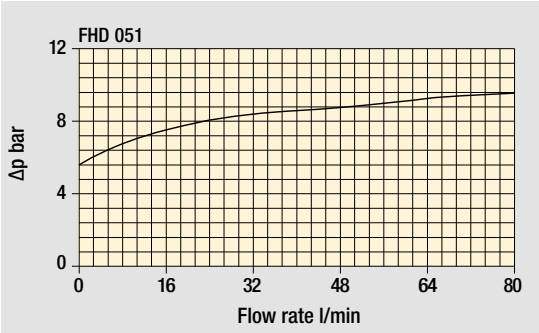

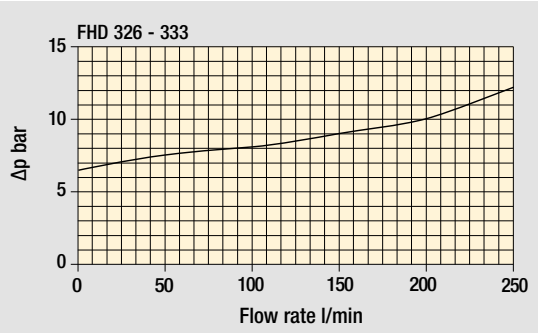

The curves are plotted using mineral oil with density of 0.86 kg/dm^3 in compliance with ISO 3968. Δp varies proportionally with density.

FHD FHD021

Designation & Ordering code

COMPLETE FILTER

Configuration example: FHD021 | 4 | S | A | G1 | A06 | H | P01

Series and size
FHD021

Length
2 | **3** | **4** |

Valves
S Without bypass

Seals
A NBR
V FPM

Connections
G1 G 1/2”
G2 1/2” NPT
G3 SAE 8 - 3/4” - 16 UNF

Filtration rating (filter media)

A03	Inorganic microfiber	3 µm	**A16**	Inorganic microfiber	16 µm
A06	Inorganic microfiber	6 µm	**A25**	Inorganic microfiber	25 µm
A10	Inorganic microfiber	10 µm	**M25**	Wire mesh	25 µm

Element Δp		Filtration rating Axx	Filtration rating M25
N	20 bar		•
H	210 bar	•	

Execution	
P01	MP Filtri standard
Pxx	Customized

FILTER ELEMENT

Configuration example: HP011 | 4 | A06 | A | H | P01

Element series and size
HP011

Element length
2 | **3** | **4** |

Filtration rating (filter media)

A03	Inorganic microfiber	3 µm	**A16**	Inorganic microfiber	16 µm
A06	Inorganic microfiber	6 µm	**A25**	Inorganic microfiber	25 µm
A10	Inorganic microfiber	10 µm	**M25**	Wire mesh	25 µm

Seals	
A	NBR
V	FPM

Element Δp		Filtration rating Axx	Filtration rating M25
N	20 bar		•
H	210 bar	•	•

Execution	
P01	MP Filtri standard
Pxx	Customized

ACCESSORIES

Differential indicators		page
DEA	Electrical differential indicator	577
DEH	Hazardous area electronic differential indicator	577-578
DEM	Electrical differential indicator	578-579
DLA	Electrical / visual differential indicator	579-580
DLE	Electrical / visual differential indicator	580
DTA	Electronic differential indicator	581
DVA	Visual differential indicator	581
DVM	Visual differential indicator	581

Additional features		page
T2	Plug	582

Dimensions

FHD021	
Filter length	**H [mm]**
2	172
3	222
4	272

Connections	R
G1	M6
G2 - G3	1/4" UNC

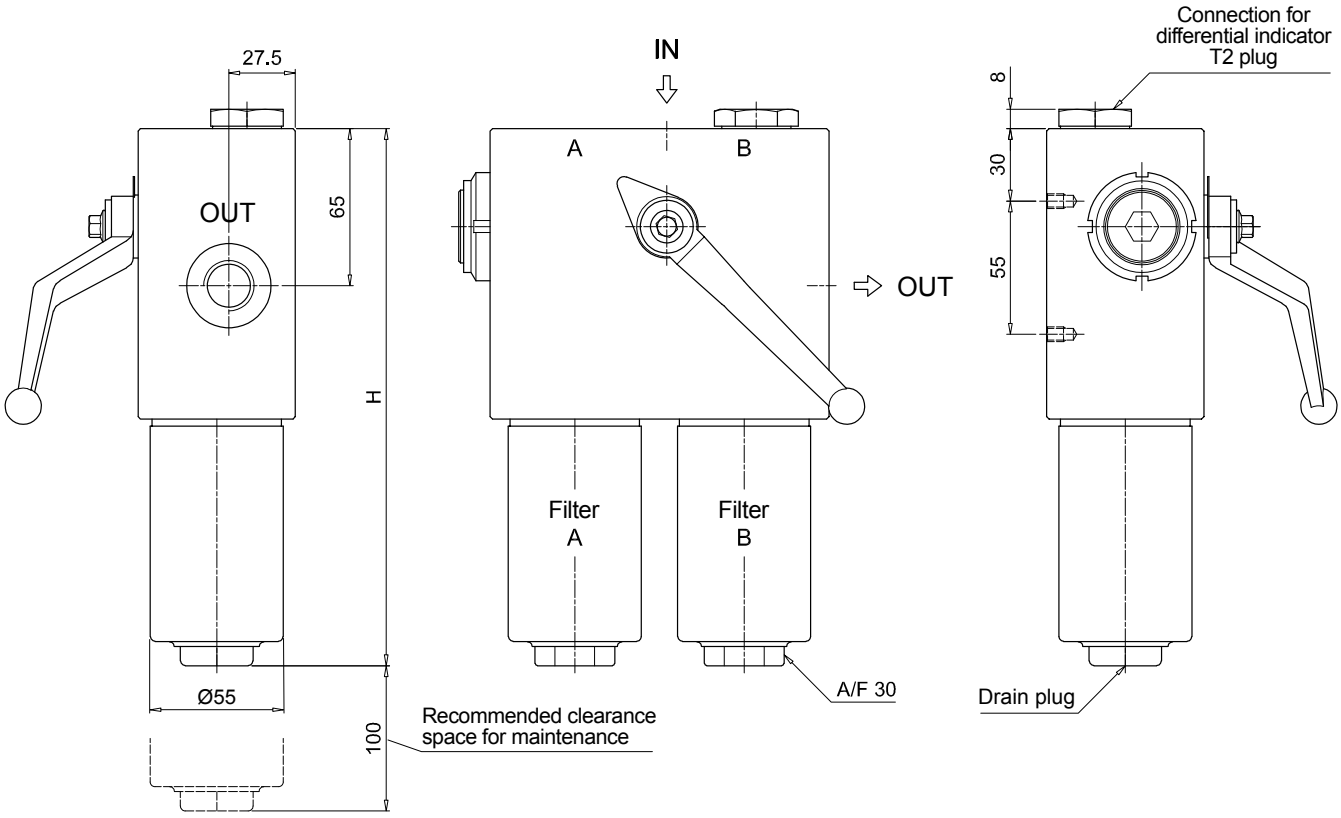

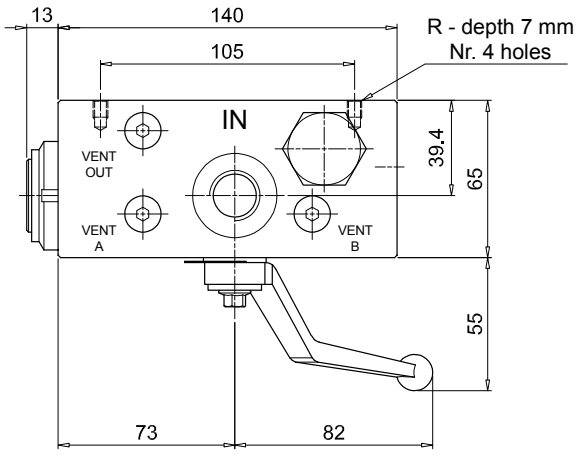

FHD FHD051 - FHD326 - FHD333

Designation & Ordering code

COMPLETE FILTER

Configuration example: FHD326 | 3 | S | A | G1 | M25 | N | P01

Series and size

FHD051 | **FHD326** | **FHD333**

Length	FHD051	FHD326	FHD333
1		•	
2	•	•	•
3	•	•	•
4	•		•
5	•		

Valves

S	Without bypass
B	With bypass 6 bar

Seals

A	NBR
V	FPM

Connections	FHD051	FHD326	FHD333
G1	G 3/4”	G 1 1/4”	-
G2	3/4” NPT	-	-
G3	G 1/2”	1 1/4” NPT	-
G4	1/2” NPT	SAE 20 - 1 5/8” - 12 UN	-
G5	SAE 8 - 3/4” - 16 UNF	-	-
G6	SAE 12 - 1 1/16” - 12 UN	-	-
F1	-	-	1 1/2” SAE 6000 psi/M
F2	-	-	1 1/2” SAE 6000 psi/UNC

Filtration rating (filter media)

A03	Inorganic microfiber	3 µm
A06	Inorganic microfiber	6 µm
A10	Inorganic microfiber	10 µm
A16	Inorganic microfiber	16 µm
A25	Inorganic microfiber	25 µm
M25	Wire mesh	25 µm

Element Δp		Filtration rating Axx	M25
N	20 bar		•
R	20 bar	•	•
S	210 bar	•	•

Execution

P01	MP Filtri standard
Pxx	Customized

FILTER ELEMENT

Configuration example: HP320 | 3 | M25 | A | N | P01

Element series and size

	FHD051	FHD326	FHD333
HP050	•		
HP320		•	•

Element length	HP050	HP320
1		•
2	•	•
3	•	•
4	•	•
5	•	

Filtration rating (filter media)

A03	Inorganic microfiber	3 µm
A06	Inorganic microfiber	6 µm
A10	Inorganic microfiber	10 µm
A16	Inorganic microfiber	16 µm
A25	Inorganic microfiber	25 µm
M25	Wire mesh	25 µm

Seals

A	NBR
V	FPM

Element Δp		Filtration rating Axx	M25
N	20 bar		•
R	20 bar	•	•
S	210 bar	•	•

Execution

P01	MP Filtri standard
Pxx	Customized

ACCESSORIES

Differential indicators		page
DEA	Electrical differential indicator	577
DEH	Hazardous area electronic differential indicator	577-578
DEM	Electrical differential indicator	578-579
DLA	Electrical / visual differential indicator	579-580
DLE	Electrical / visual differential indicator	580
DTA	Electronic differential indicator	581
DVA	Visual differential indicator	581
DVM	Visual differential indicator	581

Additional features		page
T2	Plug	582

Dimensions

FHD051

Filter length	H [mm]
2	253
3	295
4	343
5	465

Connections	R
G1	M6
G2	1/4" UNC
G3	M6
G4-G5-G6	1/4" UNC

Valves	L [mm]	L1 [mm]
S	168	138
B	182.5	152.5

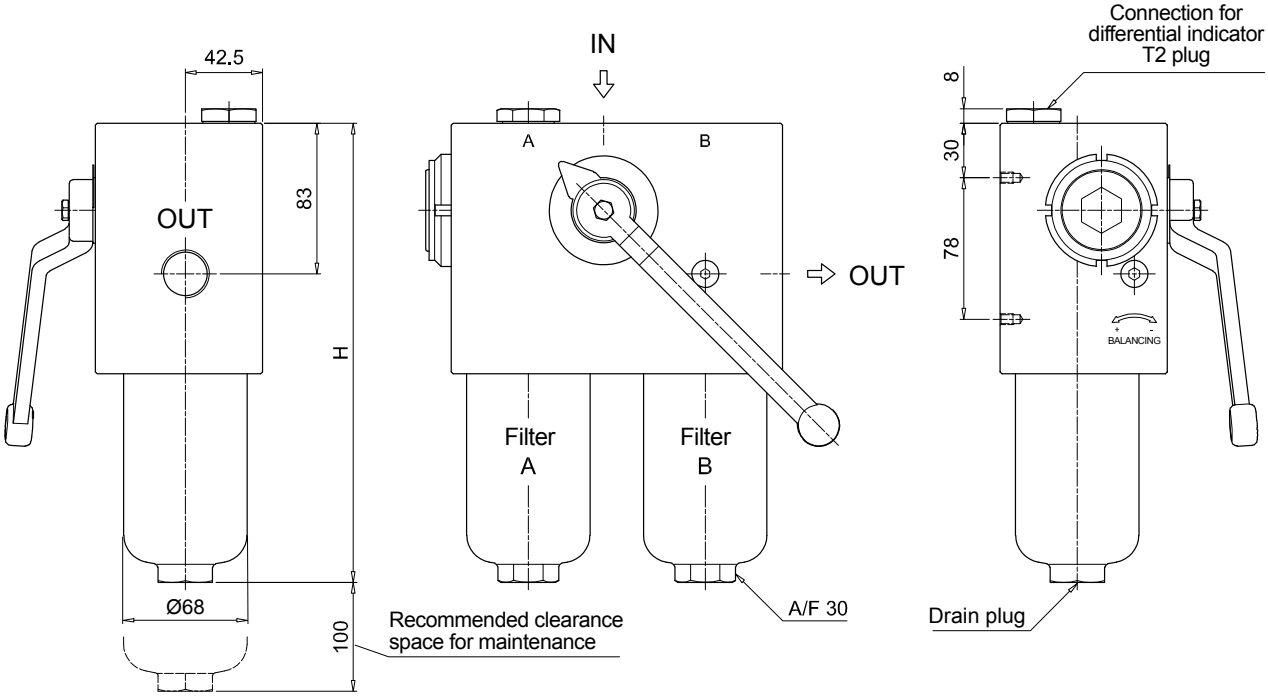

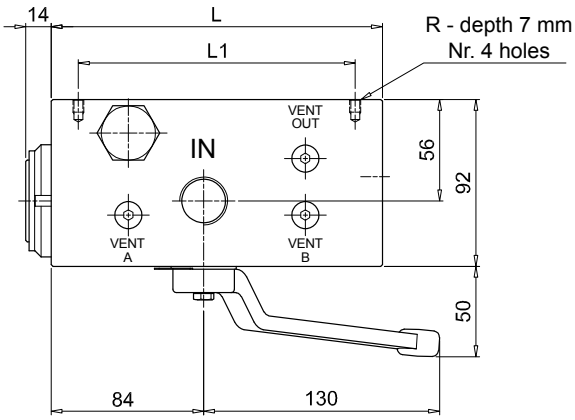

Dimensions

FHD326	
Filter length	**H [mm]**
1	309
2	432
3	564

Connections	R
G1	M10
G2 - G3	3/8" UNC

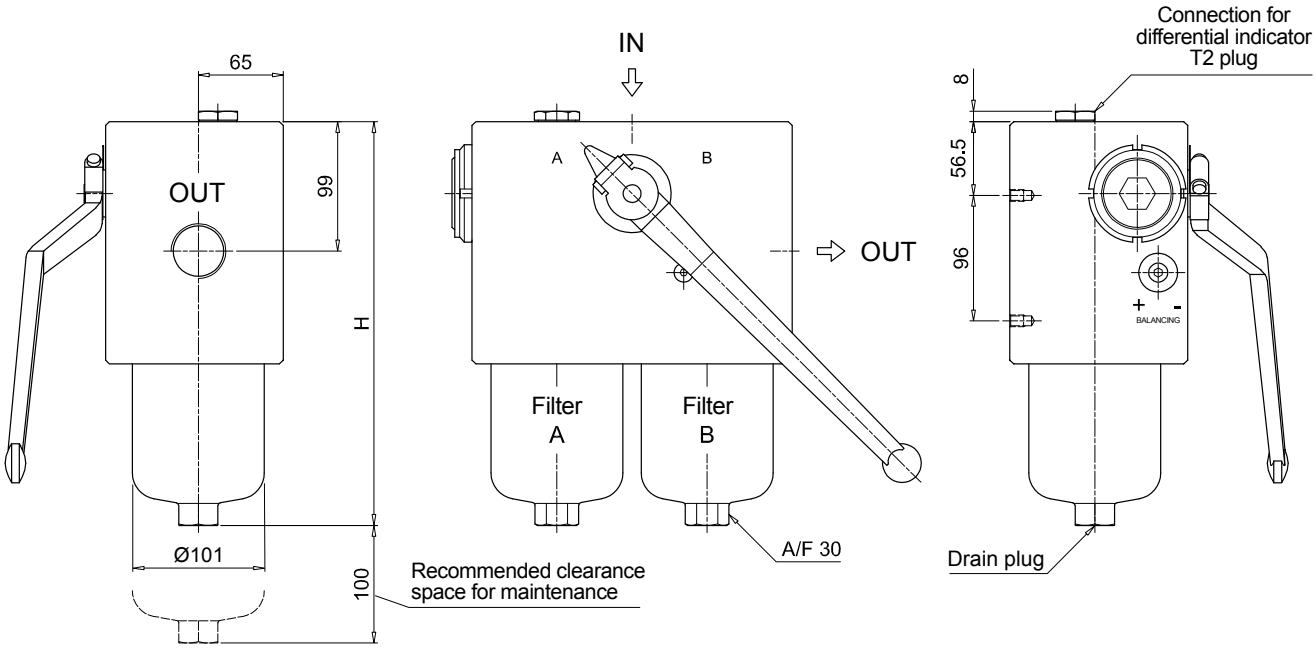

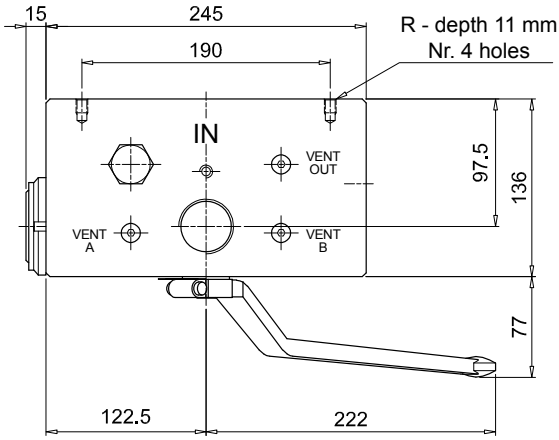

FHD333	
Length 2 - 3	
Filter length	**H [mm]**
2	479
3	612

Connections	**R**
F1	M10
F2	3/8" UNC

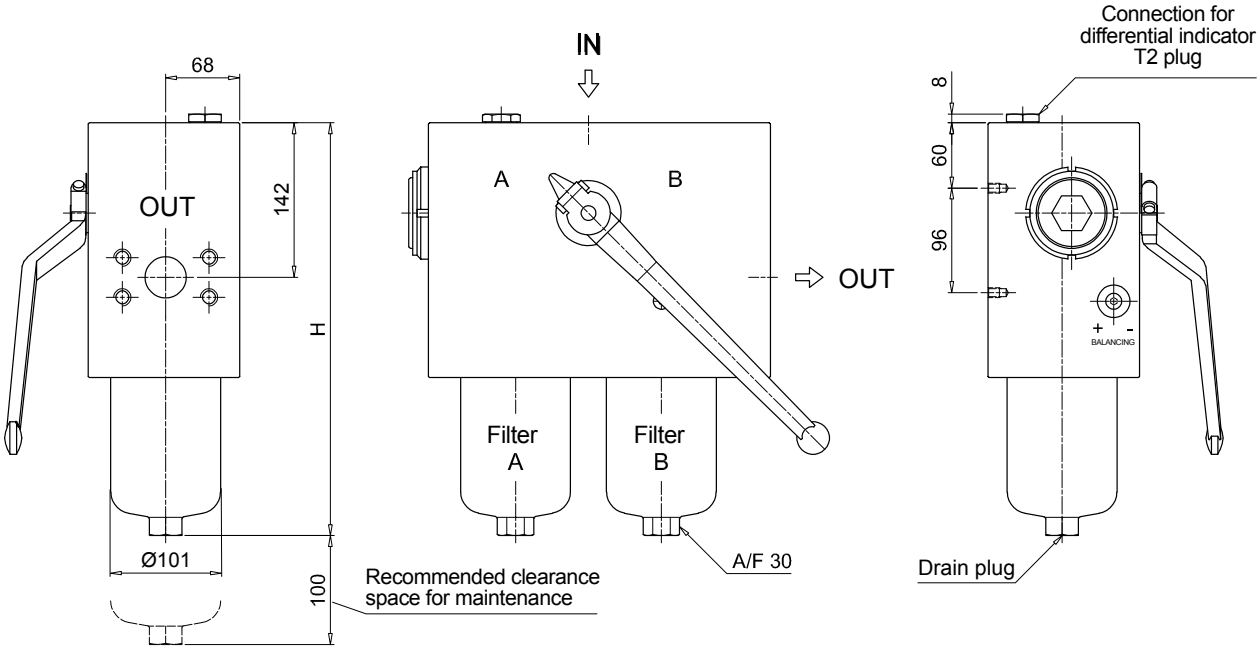

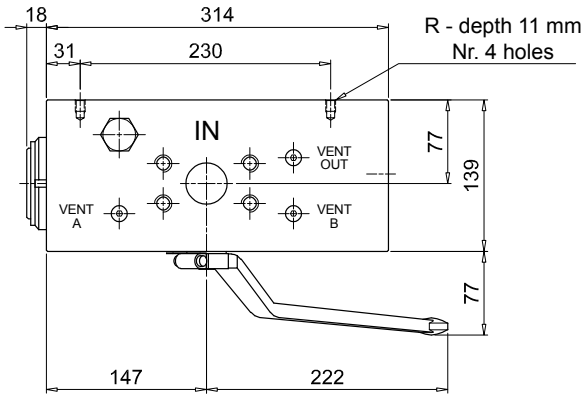

Dimensions

FHD333	
Length 4	
Connections	R
F1	M10
F2	3/8" UNC

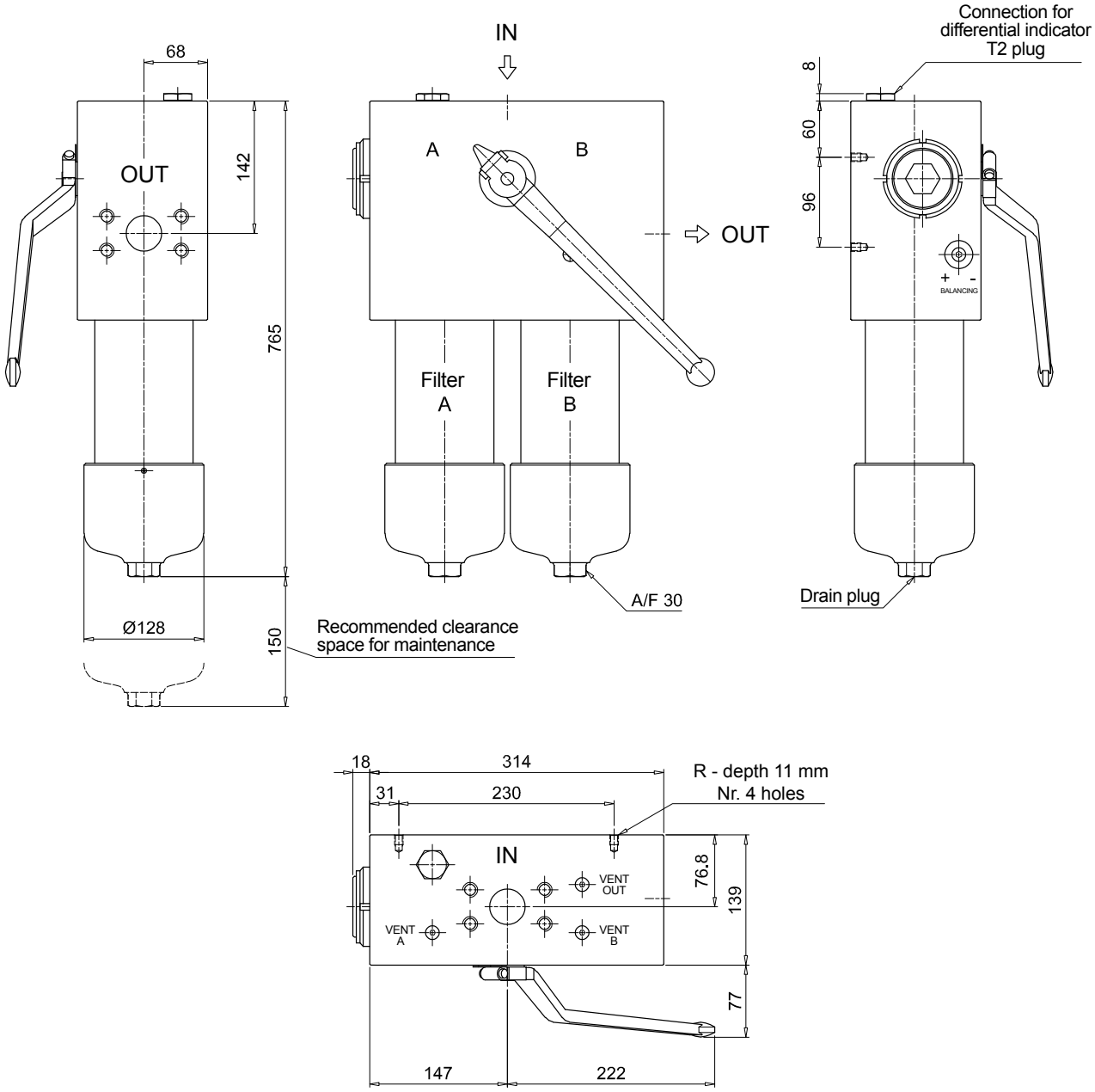

Order number for spare parts

FHD 021 - 051 - 326 - 333

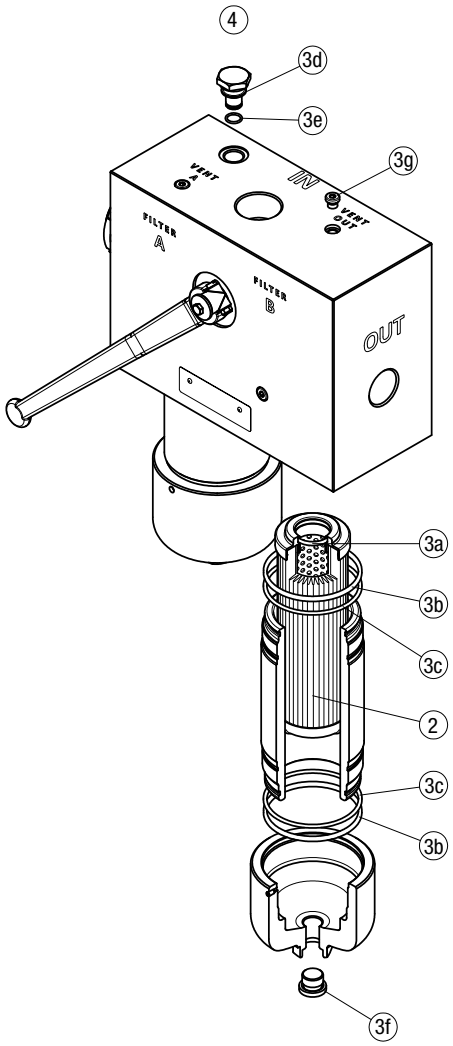

Item:	Q.ty: 1 pc. 2	Q.ty: 1 pc. 3 (3a ÷ 3g)		Q.ty: 1 pc. 4	
Filter series	Filter element	Seal Kit code number NBR	FPM	Indicator connection plug NBR	FPM
FHD 021	See order table	02050511	02050512	T2H	T2V
FHD 051		02050420	02050421		
FHD 326-333		02050377	02050378		

HPB series
BOWL KIT

Maximum working pressure up to 42 MPa (420 bar) - Flow rate up to 300 l/min

HPB GENERAL INFORMATION

Description

High Pressure Bowl Kit

Maximum working pressure up to 42 MPa (420 bar)
Flow rate up to 300 l/min

HPB is a range of high pressure bowl kits for protection of sensitive components in high pressure hydraulic systems in the mobile machines. They are directly integrated in the control blocks.

Available features:
- Fine filtration rating, to get a good cleanliness level into the system
- Low collapse filter element "N", for use with blocks provided with bypass valve
- High collapse filter element with external support "S", for use with blocks not provided with the bypass valve

Technical data

Filter housing materials
- Housing: Phosphatized steel

Pressure
- Test pressure: 63 MPa (630 bar)
- Burst pressure: 126 MPa (1260 bar)
- Pulse pressure fatigue test: 1 000 000 cycles with pressure from 0 to 42 MPa (420 bar)

Δp element type
- Microfibre / Wire mesh filter elements - series N: 20 bar
- Microfibre / Wire mesh filter elements - series S: 210 bar
- Fluid flow through the filter element from OUT to IN

Seals
- Standard NBR series A
- Optional FPM series V

Temperature
From -25 °C to +110 °C

Note
HPB filters are provided for vertical mounting

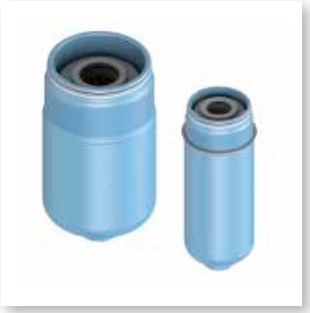

Weights [kg] and volumes [dm³]

Filter series	Weights [kg]					Volumes [dm³]				
	Length 1	2	3	4	5	Length 1	2	3	4	5
HPB 050	1.10	1.50	1.90	2.40	3.50	0.30	0.45	0.60	0.80	1.20
HPB 150	2.90	4.90	6.30	-	-	0.45	0.85	1.10	-	-

FILTER ASSEMBLY SIZING
Flow rates [l/min]

		Filter element design - N Series						Filter element design - S Series				
Filter series	Length	A03	A06	A10	A16	A25	M25	A03	A06	A10	A16	A25
HPB 050	1	42	43	79	82	106	147	29	39	57	59	74
	2	52	57	85	96	121	149	45	49	76	88	114
	3	66	69	97	106	130	150	58	61	89	99	125
	4	83	89	113	115	134	152	74	80	106	108	129
	5	107	110	130	134	141	154	93	95	111	121	139
HPB 150	1	81	88	156	163	179	295					
	2	142	145	227	230	236	312					
	3	170	180	242	245	263	315					

Maximum flow rate for a complete pressure filter with a pressure drop Δp = 1.5 bar.
The reference fluid has a kinematic viscosity of 30 mm^2/s (cSt) and a density of 0.86 kg/dm^3.
For different pressure drop or fluid viscosity we recommend to use our selection software available on www.mpfiltri.com.
You can also calculate the right size using the formulas present on the FILTER SIZING paragraph at the beginning of the full catalogue or at the beginning of the filter family brochure.
Please, contact our Sales Department for further additional information.

Hydraulic symbols

Filter series	Style S
HPB 050	•
HPB 150	•

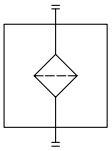

HPB HPB050

Designation & Ordering code

COMPLETE FILTER

Configuration example: HPB050 | 3 | A | A10 | N | P01

Series and size

HPB050

Length

1 | 2 | 3 | 4 | 5 |

Seals

A	NBR
V	FPM

Filtration rating (filter media)

A03	Inorganic microfiber	3 µm
A06	Inorganic microfiber	6 µm
A10	Inorganic microfiber	10 µm
A16	Inorganic microfiber	16 µm
A25	Inorganic microfiber	25 µm
M25	Wire mesh	25 µm

Element Δp

N	20 bar
S	210 bar

Execution

P01	MP Filtri standard
Pxx	Customized

FILTER ELEMENT

Configuration example: HP050 | 3 | A10 | A | N | P01

Element series and size

HP050

Element length

1 | 2 | 3 | 4 | 5 |

Seals

A	NBR
V	FPM

Filtration rating (filter media)

A03	Inorganic microfiber	3 µm
A06	Inorganic microfiber	6 µm
A10	Inorganic microfiber	10 µm
A16	Inorganic microfiber	16 µm
A25	Inorganic microfiber	25 µm
M25	Wire mesh	25 µm

Seals

A	NBR
V	FPM

Element Δp

N	20 bar
S	210 bar

Execution

P01	MP Filtri standard
Pxx	Customized

HPB050	
Filter length	**H [mm]**
1	107
2	144
3	186
4	234
5	356

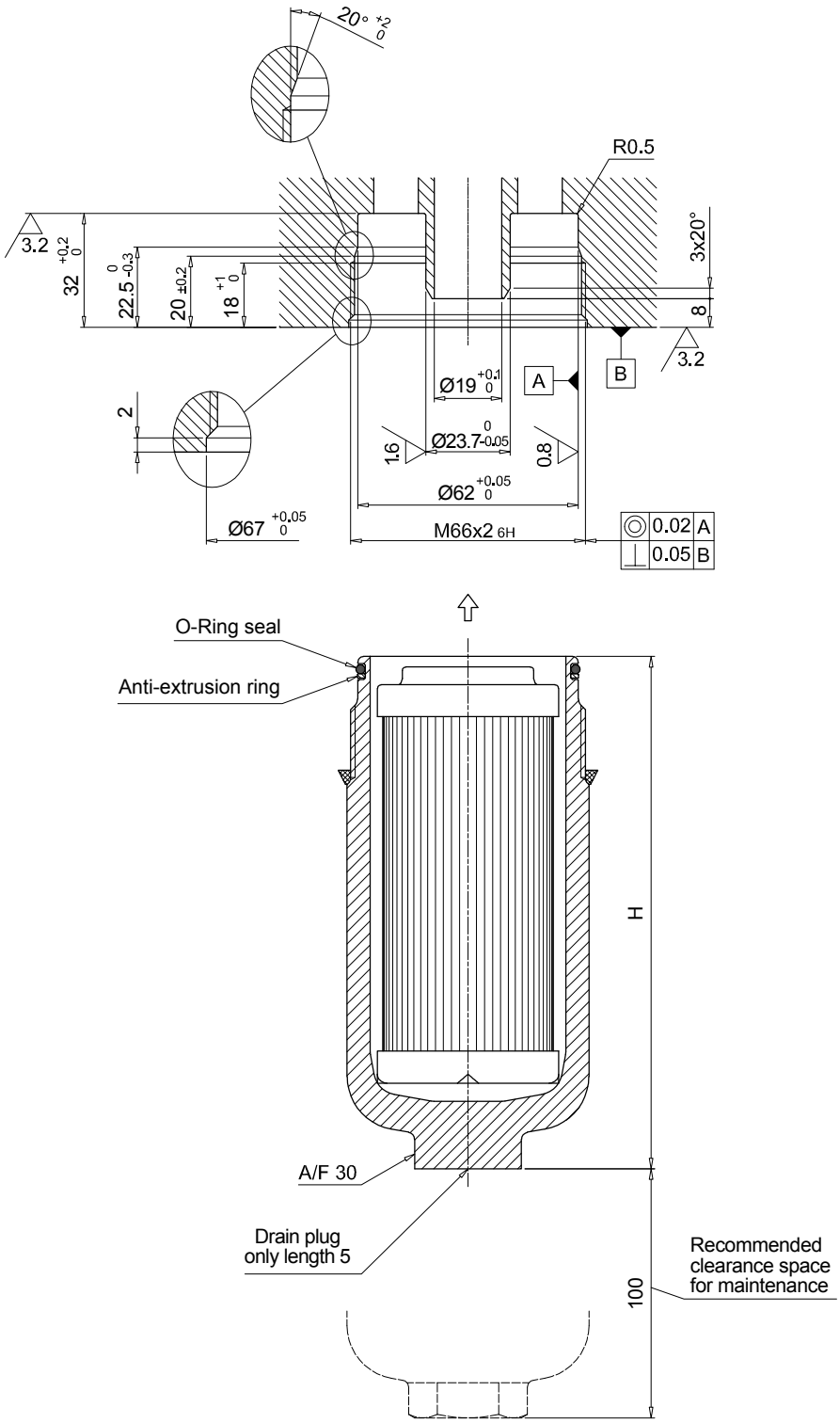

HPB HPB150

Designation & Ordering code

COMPLETE FILTER

Configuration example: HPB150 | 3 | A | A10 | N | P01

Series and size

HPB150

Length

1 | 2 | 3 |

Seals

A	NBR
V	FPM

Filtration rating (filter media)

A03	Inorganic microfiber	3 µm
A06	Inorganic microfiber	6 µm
A10	Inorganic microfiber	10 µm
A16	Inorganic microfiber	16 µm
A25	Inorganic microfiber	25 µm
M25	Wire mesh	25 µm

Element Δp

N	20 bar

Execution

P01	MP Filtri standard
Pxx	Customized

FILTER ELEMENT

Configuration example: HP150 | 3 | A10 | A | N | P01

Element series and size

HP150

Element length

1 | 2 | 3 |

Seals

A	NBR
V	FPM

Filtration rating (filter media)

A03	Inorganic microfiber	3 µm
A06	Inorganic microfiber	6 µm
A10	Inorganic microfiber	10 µm
A16	Inorganic microfiber	16 µm
A25	Inorganic microfiber	25 µm
M25	Wire mesh	25 µm

Seals

A	NVR
V	FPM

Element Δp

N	20 bar

Execution

P01	MP Filtri standard
Pxx	Customized

HPB150	
Filter length	**H [mm]**
1	161
2	271
3	346

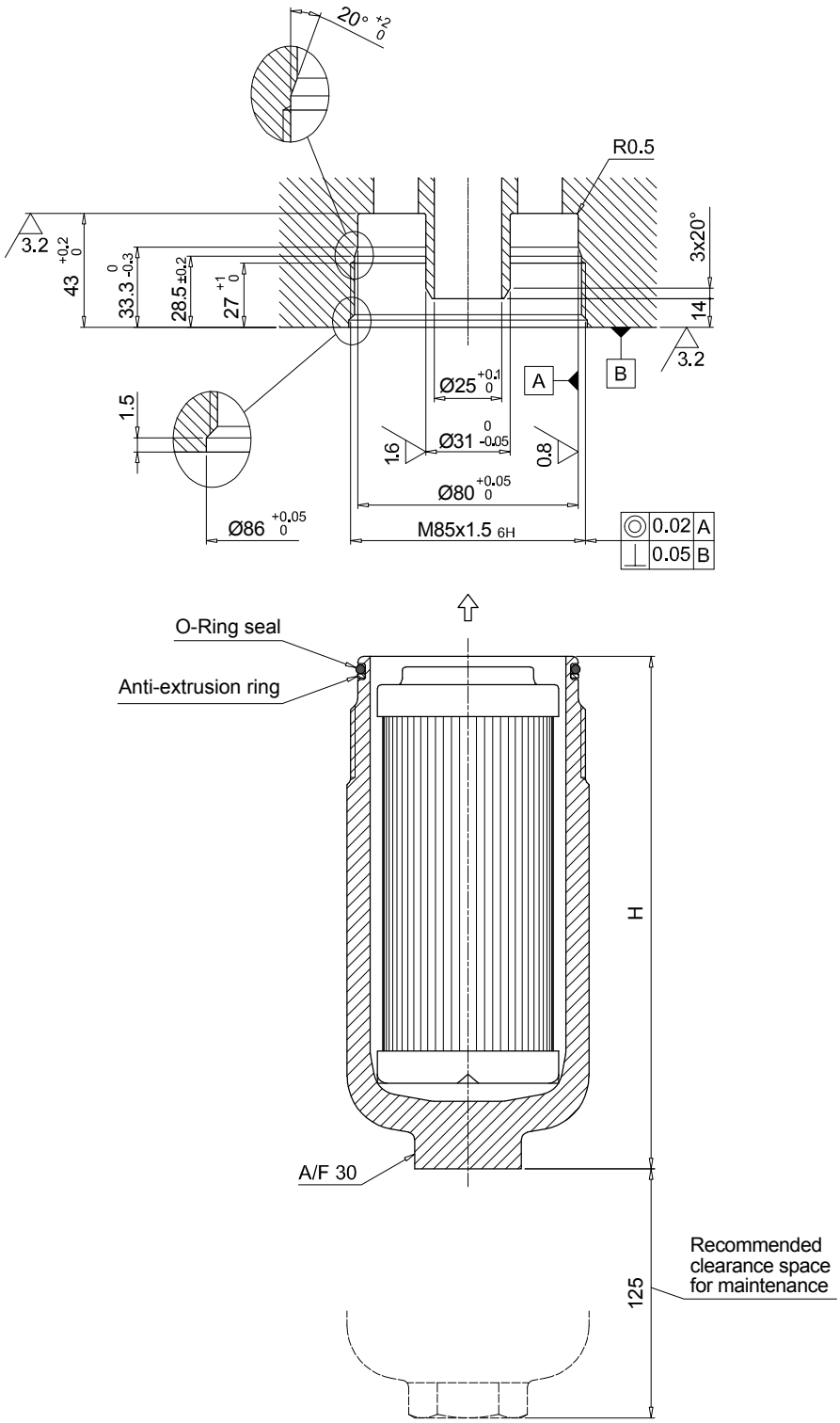

Order number for spare parts

HPB 050

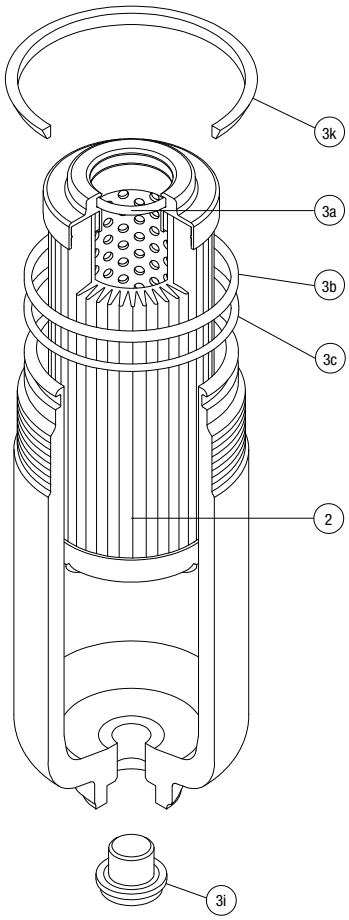

Item:	Q.ty: 1 pc. 2	Q.ty: 1 pc. 3 (3a ÷ 3i)	
Filter series	Filter element	Seal Kit code number NBR	FPM
HPB 050	See order table	02050813	02050823

HPB 150

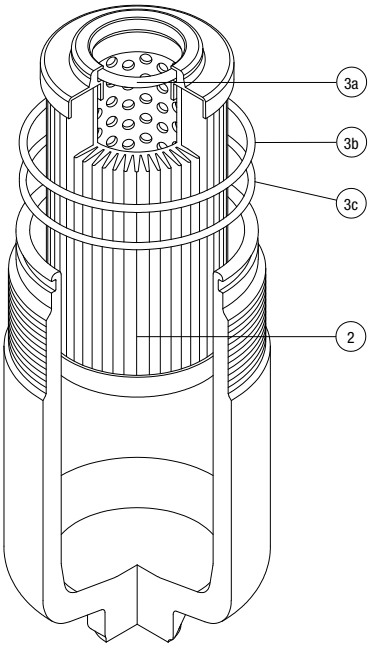

Item:	Q.ty: 1 pc. 2	Q.ty: 1 pc. 3 (3a ÷ 3c)	
Filter series	Filter element	Seal Kit code number NBR	FPM
HPB 150	See order table	02050816	02050826

Clogging indicators

Differential indicators

Introduction

Filter elements are efficient only if their Dirt Holding Capacity is fully exploited. This is achieved by using filter housings equipped with clogging indicators.

These devices trip when the clogging of the filter element causes an increase in pressure drop across the filter element.

The indicator is set to alarm before the element becomes fully clogged.

MP Filtri can supply indicators of the following designs:

- Vacuum switches and gauges
- Pressure switches and gauges
- Differential pressure indicators

These type of devices can be provided with a visual, electrical or both signals.

The electronic model (only available for differential type indicators) with warning signals (75% of clogging) and alarm (clogging).

Suitable indicator types

DIFFERENTIAL INDICATORS

Differential indicators are used on the Pressure line to check the efficiency of the filter element. They measure the pressure upstream and downstream of the filter element (differential pressure).
Standard items are produced with special connection G 1/2" size.
Also available in Stainless Steel models.

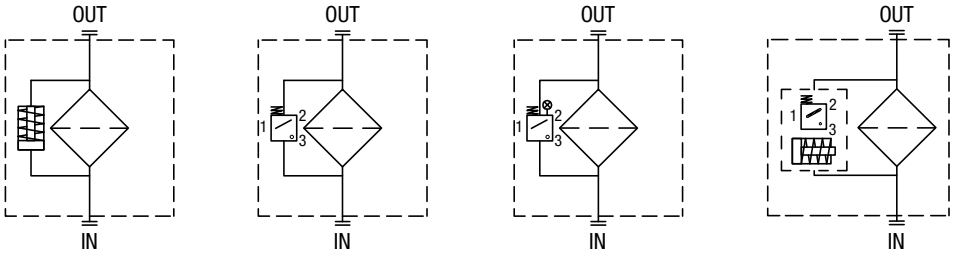

Quick reference guide

	Filter series	Visual indicator	Electrical indicator	Electrical / Visual indicator	Electronic indicator	Hazardous area electronic indicator (NEW)
With bypass valve	FMP 039 - 065 - 135 - 320 FHP 010 - 011 - 065 - 135 - 350 - 500 FMM 050 - 150 FHA 051 FHM 006 - 007 - 010 - 050 - 065 - 135 - 320 - 500 FHB 050 - 135 - 320 FHF 325 FHD 021 - 051 - 326 - 333	DVA50xP01 DVM50xP01	DEA50xA50P01 DEM50xAxxP01	DLA50xA51P01 DLA50xA52P01 DLA50xA71P01 DLE50xA50P01 DLE50xF50P01	DTA50xF70P01	DEH50xA48P01 DEH50xA49P01 DEH50xA70P01 DEH70xA48P01 DEH70xA49P01 DEH70xA70P01
Without bypass valve	FMP 039 - 065 - 135 - 320 FHP 010 - 011 - 065 - 135 - 350 - 500 FMM 050 - 150 FHA 051 FHM 006 - 007 - 010 - 050 - 065 - 135 - 320 - 500 FHB 050 - 135 - 320 FHF 325 FHD 021 - 051 - 326 - 333	DVA70xP01 DVM70xP01	DEA70xA50P01 DEM70xAxxP01	DLA70xA51P01 DLA70xA52P01 DLA70xA71P01 DLE70xA50P01 DLE70xF50P01	DTA70xF70P01	DEH50xA48P01 DEH50xA49P01 DEH50xA70P01 DEH70xA48P01 DEH70xA49P01 DEH70xA70P01

DEA*50

Electrical Differential Indicator

Settings	Ordering code
5.0 bar ±10%	DE A 50 x A 50 P01
7.0 bar ±10%	DE A 70 x A 50 P01
9.5 bar ±10%	DE A 95 x A 50 P01

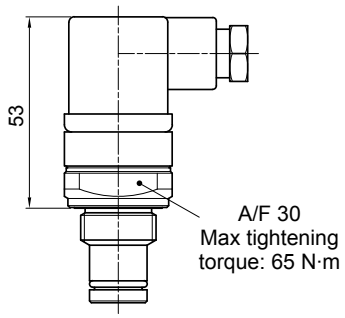

Hydraulic symbol

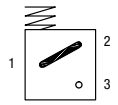

Electrical symbol

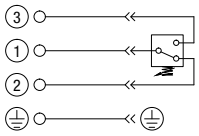

Materials
- Body: Brass
- Base: Black Nylon
- Contacts: Silver
- Seal: HNBR - FPM

Technical data
- Max working pressure: 420 bar
- Proof pressure: 630 bar
- Burst pressure: 1260 bar
- Working temperature: From -25 °C to +110 °C
- Compatibility with fluids: Mineral oils, Synthetic fluids HFA, HFB, HFC according to ISO 2943
- Degree protection: IP66 according to EN 60529 IP69K according to ISO 20653

Electrical data
- Electrical connection: EN 175301-803
- Resistive load: 0.2 A / 115 Vdc

DEH*48

Hazardous Area Electronic Differential Indicator

Settings	Ordering code
5.0 bar ±10%	DE H 50 x A 48 P01
7.0 bar ±10%	DE H 70 x A 48 P01

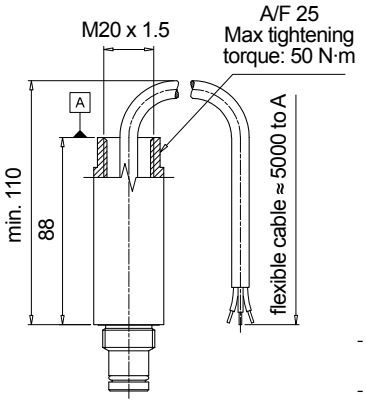

Hydraulic symbol

Electrical symbol

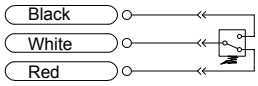

- Certification / Approvals: ATEX, IECEx, EAC TR CU, INMETRO
- Certification included as standard

Materials
- Body: AISI 316L
- Contacts: Rhodium
- Seal: FPM - MFQ

Technical data
- Max working pressure: 420 bar
- Proof pressure: 630 bar
- Burst pressure: 1260 bar
- Working temperature: From -60 °C to +125 °C
- Compatibility with fluids: Mineral oils, Synthetic fluids HFA, HFB, HFC according to ISO 2943
- Protection class: EX ia IIC T4/T6: Intrinsically safe
- Temperature class: T4 (135 °C) and T6 (85 °C)
- Degree of protection: IP 66/67/68 according to EN 60529
- Connection type: Three-core cable, fitting M20x1.5
- Contact type: SPCO/SPDT (Hermetically sealed - Volt-free contacts)

Electrical data
- Resistive Load: 830 mA / 24 Vdc - 180 mA / 110 Vac
- Electrical Ratings: Ui = 30 Vdc Ii = 250 mA Pi = 1.3 W

DEH*49

Hazardous Area Electronic Differential Indicator

Settings	Ordering code
5.0 bar ±10%	DE H 50 x A 49 P01
7.0 bar ±10%	DE H 70 x A 49 P01

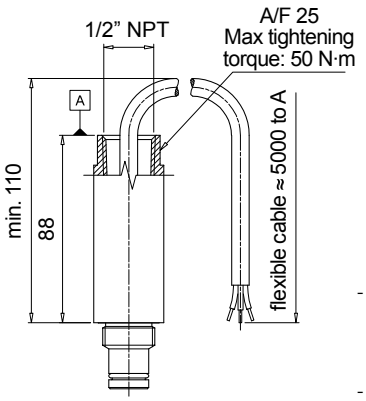

Hydraulic symbol

Electrical symbol

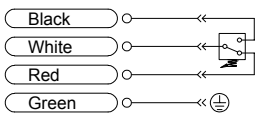

- Certification / Approvals: ATEX, IECEx, EAC TR CU, INMETRO, UL/CSA Class I Division 1 Groups A-D, UL/CSA Class II Division 1 Groups E-G
- Certification included as standard

Materials
- Body: AISI 316L
- Contacts: Rhodium
- Seal: FPM - MFQ

Technical data
- Max working pressure: 420 bar
- Proof pressure: 630 bar
- Burst pressure: 1260 bar
- Working temperature: From -60 °C to +120 °C : ATEX, IECEx, EAC TR CU, INMETRO From -60 °C to +105 °C : UL/CSA
- Compatibility with fluids: Mineral oils, Synthetic fluids HFA, HFB, HFC according to ISO 2943
- Protection class: Ex d IIC T4/T6: Flameproof
- Temperature class: T4 (135 °C) and T6 (85 °C)
- Degree of protection: IP 66/67/68 according to EN 60529
- Connection type: Four-core cable, fitting 1/2" NPT
- Contact type: SPCO/SPDT (Hermetically sealed - Volt-free contacts)

Electrical data
- Resistive Load: 830 mA / 24 Vdc - 180 mA / 110 Vac
- Max voltage 150 Vac/dc
- Power 20 W

Dimensions

DEH*70

Hazardous Area
Electronic Differential Indicator

Settings	Ordering code
5.0 bar ±10%	DE H 50 x A 70 P01
7.0 bar ±10%	DE H 70 x A 70 P01

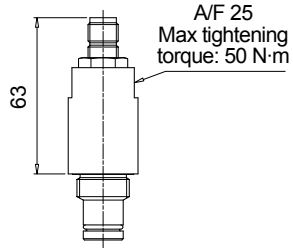

Hydraulic symbol

Electrical symbol

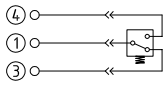

- Certification / Approvals:
  ATEX, IECEx, EAC TR CU, INMETRO
- Certification included as standard

Materials
- Body: AISI 316L with internal engineered resin switch
- Contacts: Rhodium
- Seal: FPM - MFQ

Technical data
- Max working pressure: 420 bar
- Proof pressure: 630 bar
- Burst pressure: 1260 bar
- Working temperature: From -60 °C to +80 °C
- Compatibility with fluids: Mineral oils, Synthetic fluids HFA, HFB, HFC according to ISO 2943
- Protection class: EX ia IIC T6: Intrinsically safe
- Temperature class: T6 (85 °C)
- Degree of protection: IP 66/67 according to EN 60529
- Connection type: IEC 61076-2-101 D (M12)
- Contact type: SPCO/SPDT (Hermetically sealed - Volt-free contacts)

Electrical data
- Resistive Load: 830 mA / 24 Vdc - 180 mA / 110 Vdc
- Electrical Ratings: Ui = 30 Vdc
  Ii = 250 mA
  Pi = 1.3 W

DEM*10

Electrical Differential Indicator

Settings	Ordering code
5.0 bar ±10%	DE M 50 x x 10 P01
7.0 bar ±10%	DE M 70 x x 10 P01
9.5 bar ±10%	DE M 95 x x 10 P01

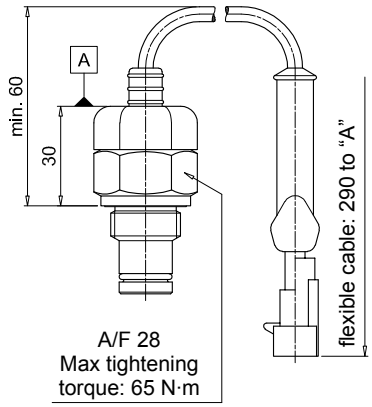

Hydraulic symbol

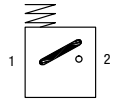

Electrical symbol

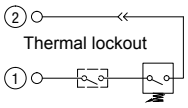

Materials
- Body: Brass
- Base: Black Nylon
- Contacts: Silver
- Seal: HNBR - FPM

Technical data
- Max working pressure: 420 bar
- Proof pressure: 630 bar
- Burst pressure: 1260 bar
- Working temperature: From -25 °C to +110 °C
- Compatibility with fluids: Mineral oils, Synthetic fluids HFA, HFB, HFC according to ISO 2943
- Degree protection: IP66 according to EN 60529

Electrical data
- Electrical connection: AMP Superseal series 1.5
- Resistive load: 0.2 A / 115 Vdc
- Switching type: Normally open contacts (NC on request)
- Thermal lockout: Normally open up to 30 °C (option "F")

DEM*20

Electrical Differential Indicator

Settings	Ordering code
5.0 bar ±10%	DE M 50 x x 20 P01
7.0 bar ±10%	DE M 70 x x 20 P01
9.5 bar ±10%	DE M 95 x x 20 P01

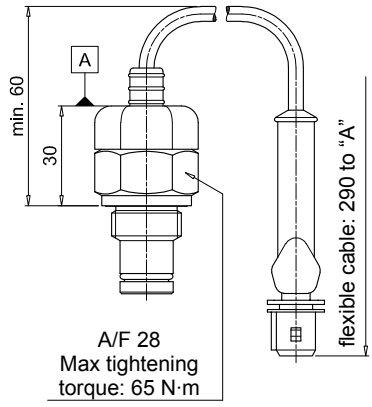

Hydraulic symbol

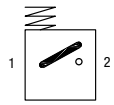

Electrical symbol

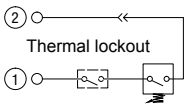

Materials
- Body: Brass
- Base: Black Nylon
- Contacts: Silver
- Seal: HNBR - FPM

Technical data
- Max working pressure: 420 bar
- Proof pressure: 630 bar
- Burst pressure: 1260 bar
- Working temperature: From -25 °C to +110 °C
- Compatibility with fluids: Mineral oils, Synthetic fluids HFA, HFB, HFC according to ISO 2943
- Degree protection: IP66 according to EN 60529

Electrical data
- Electrical connection: AMP Time junior
- Resistive load: 0.2 A / 115 Vdc
- Switching type: Normally open contacts (NC on request)
- Thermal lockout: Normally open up to 30 °C (option "F")

DEM*30

Electrical Differential Indicator

Settings	Ordering code
5.0 bar ±10%	DE M 50 x x 30 P01
7.0 bar ±10%	DE M 70 x x 30 P01
9.5 bar ±10%	DE M 95 x x 30 P01

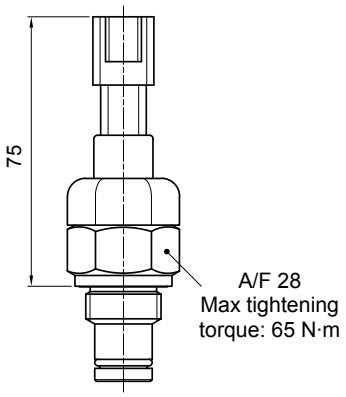

Hydraulic symbol

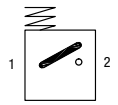

Electrical symbol

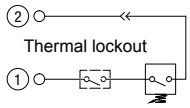

Materials
- Body: Brass
- Base: Black Nylon
- Contacts: Silver
- Seal: HNBR - FPM

Technical data
- Max working pressure: 420 bar
- Proof pressure: 630 bar
- Burst pressure: 1260 bar
- Working temperature: From -25 °C to +110 °C
- Compatibility with fluids: Mineral oils, Synthetic fluids HFA, HFB, HFC according to ISO 2943
- Degree protection: IP66 according to EN 60529

Electrical data
- Electrical connection: Deutsch DT-04-2-P
- Resistive load: 0.2 A / 115 Vdc
- Switching type: Normally open contacts (NC on request)
- Thermal lockout: Normally open up to 30 °C (option "F")

DEM*35

Electrical Differential Indicator

Settings	Ordering code
5.0 bar ±10%	DE M 50 x x 35 P01
7.0 bar ±10%	DE M 70 x x 35 P01
9.5 bar ±10%	DE M 95 x x 35 P01

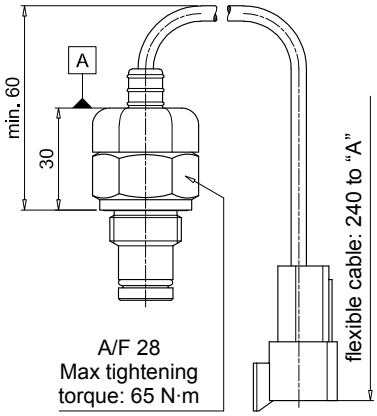

Hydraulic symbol

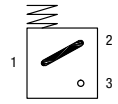

Electrical symbol

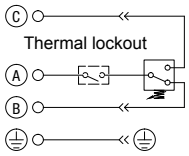

Materials
- Body: Brass
- Base: Black Nylon
- Contacts: Silver
- Seal: HNBR - FPM

Technical data
- Max working pressure: 420 bar
- Proof pressure: 630 bar
- Burst pressure: 1260 bar
- Working temperature: From -25 °C to +110 °C
- Compatibility with fluids: Mineral oils, Synthetic fluids HFA, HFB, HFC according to ISO 2943
- Degree protection: IP66 according to EN 60529

Electrical data
- Electrical connection: Deutsch DT-04-3-P
- Resistive load: 0.2 A / 115 Vdc
- Switching type: SPDT contact
- Thermal lockout: Normally open up to 30 °C (option "F")

DLA*51 - DLA*52

Electrical/Visual Differential Indicator

Settings	Ordering code
5.0 bar ±10%	DL A 50 x A xx P01
7.0 bar ±10%	DL A 70 x A xx P01
9.5 bar ±10%	DL A 95 x A xx P01

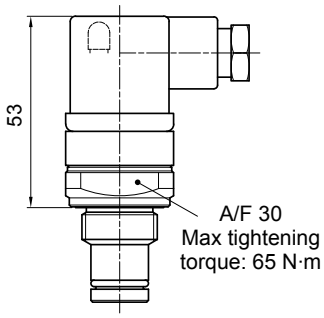

Hydraulic symbol

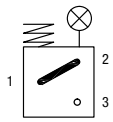

Electrical symbol

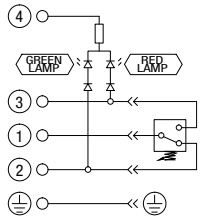

Materials
- Body: Brass
- Base: Transparent Nylon
- Contacts: Silver
- Seal: HNBR - FPM

Technical data
- Max working pressure: 420 bar
- Proof pressure: 630 bar
- Burst pressure: 1260 bar
- Working temperature: From -25 °C to +110 °C
- Compatibility with fluids: Mineral oils, Synthetic fluids HFA, HFB, HFC according to ISO 2943
- Degree protection: IP66 according to EN 60529 IP69K according to ISO 20653

Electrical data

- Electrical connection:	EN 175301-803	
- Type	51	52
- Lamps	24 Vdc	110 Vdc
- Resistive load:	1 A / 24 Vdc	1 A / 110 Vdc

Dimensions

DLA*71

Electrical/Visual Differential Indicator

Settings	Ordering code
5.0 bar ±10%	DL A 50 x A 71 P01
7.0 bar ±10%	DL A 70 x A 71 P01
9.5 bar ±10%	DL A 95 x A 71 P01

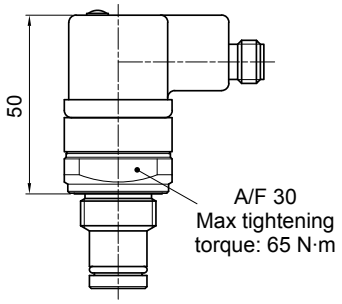

Hydraulic symbol

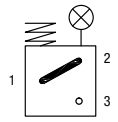

Electrical symbol

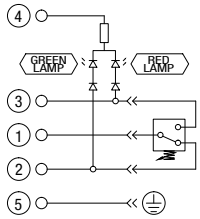

Materials
- Body: Brass
- Base: Black Nylon
- Contacts: Silver
- Seal: HNBR - FPM

Technical data
- Max working pressure: 420 bar
- Proof pressure: 630 bar
- Burst pressure: 1260 bar
- Working temperature: From -25 °C to +110 °C
- Compatibility with fluids: Mineral oils, Synthetic fluids HFA, HFB, HFC according to ISO 2943
- Degree protection: IP65 according to EN 60529 IP69K according to ISO 20653

Electrical data
- Electrical connection: IEC 61076-2-101 D (M12)
- Lamps 24 Vdc
- Resistive load: 0.4 A / 24 Vdc

DLE*A50

Electrical/Visual Differential Indicator

Settings	Ordering code
5.0 bar ±10%	DL E 50 x A 50 P01
7.0 bar ±10%	DL E 70 x A 50 P01
9.5 bar ±10%	DL E 95 x A 50 P01

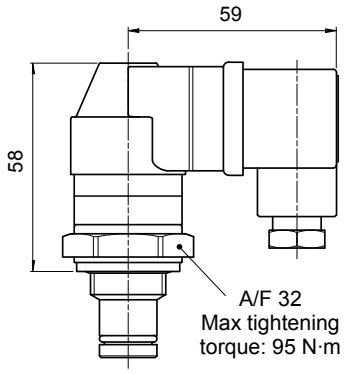

Hydraulic symbol

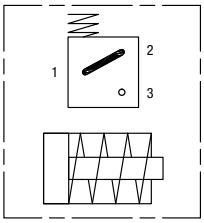

Electrical symbol

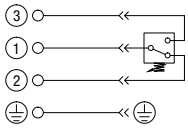

Materials
- Body: Brass
- Base: Black Nylon
- Contacts: Silver
- Seal: HNBR - FPM

Technical data
- Max working pressure: 420 bar
- Proof pressure: 630 bar
- Burst pressure: 1260 bar
- Working temperature: From -25 °C to +110 °C
- Compatibility with fluids: Mineral oils, Synthetic fluids HFA, HFB, HFC according to ISO 2943
- Degree protection: IP65 according to EN 60529

Electrical data
- Electrical connections: EN 175301-803
- Resistive load: 5 A / 250 Vac
- Available the connector with lamps

DLE*F50

Electrical/Visual Differential Indicator

Settings	Ordering code
5.0 bar ±10%	DL E 50 x F 50 P01
7.0 bar ±10%	DL E 70 x F 50 P01
9.5 bar ±10%	DL E 95 x F 50 P01

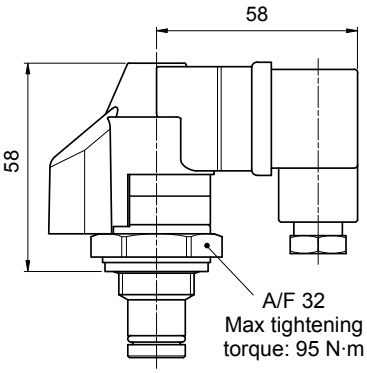

Hydraulic symbol

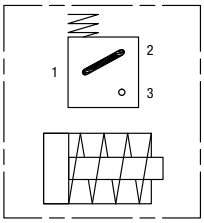

Electrical symbol

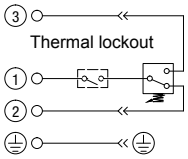

Materials
- Body: Brass
- Base: Black Nylon
- Contacts: Silver
- Seal: HNBR - FPM

Technical data
- Max working pressure: 420 bar
- Proof pressure: 630 bar
- Burst pressure: 1260 bar
- Working temperature: From -25 °C to +110 °C
- Compatibility with fluids: Mineral oils, Synthetic fluids HFA, HFB, HFC according to ISO 2943
- Degree protection: IP65 according to EN 60529

Electrical data
- Electrical connections: EN 175301-803
- Resistive load: 5 A / 250 Vac
- Thermal lockout setting: +30 °C

DTA*70

Electronic Differential Indicator

Settings	Ordering code
5.0 bar ±10%	DT A 50 x x 70 P01
7.0 bar ±10%	DT A 70 x x 70 P01
9.5 bar ±10%	DT A 95 x x 70 P01

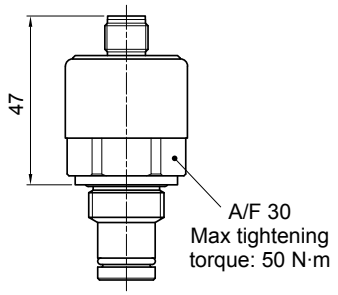

Hydraulic symbol

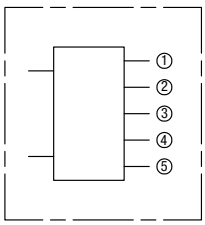

Electrical symbol

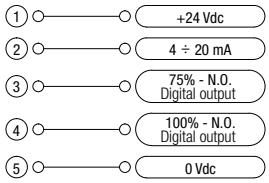

Materials
- Body: Brass
- Internal parts: Brass - Nylon
- Contacts: Silver
- Seal: HNBR - FPM

Industry 4.0 READY

Technical data
- Max working pressure: 420 bar
- Proof pressure: 630 bar
- Burst pressure: 1260 bar
- Compatibility with fluids: Mineral oils, Synthetic fluids HFA, HFB, HFC according to ISO 2943
- Degree protection: IP67 according to EN 60529

Electrical data
- Electrical connection: IEC 61076-2-101 D (M12)
- Power supply: 24 Vdc
- Analogue output: From 4 to 20 mA
- Thermal lockout: 30 °C (all output signals stalled up to 30 °C)

DVA

Visual Differential Indicator

Settings	Ordering code
5.0 bar ±10%	DV A 50 x P01
7.0 bar ±10%	DV A 70 x P01
9.5 bar ±10%	DV A 95 x P01

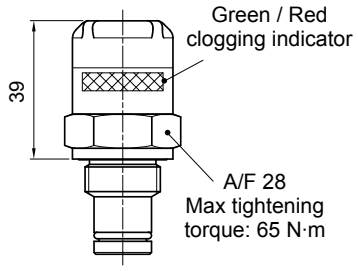

Hydraulic symbol

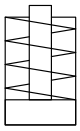

Materials
- Body: Brass
- Internal parts: Brass - Nylon
- Contacts: Silver
- Seal: HNBR - FPM

Technical data
- Reset: Automatic reset
- Max working pressure: 420 bar
- Proof pressure: 630 bar
- Burst pressure: 1260 bar
- Working temperature: From -25 °C to +110 °C
- Compatibility with fluids: Mineral oils, Synthetic fluids HFA, HFB, HFC according to ISO 2943
- Degree protection: IP65 according to EN 60529

DVM

Visual Differential Indicator

Settings	Ordering code
5.0 bar ±10%	DV M 50 x P01
7.0 bar ±10%	DV M 70 x P01
9.5 bar ±10%	DV M 95 x P01

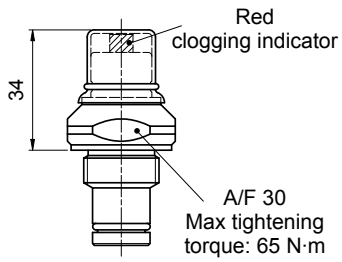

Hydraulic symbol

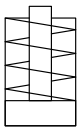

Materials
- Body: Brass
- Internal parts: Brass - Nylon
- Contacts: Silver
- Seal: HNBR - FPM

Technical data
- Reset: Manual reset
- Max working pressure: 420 bar
- Proof pressure: 630 bar
- Burst pressure: 1260 bar
- Working temperature: From -25 °C to +110 °C
- Compatibility with fluids: Mineral oils, Synthetic fluids HFA, HFB, HFC according to ISO 2943
- Degree protection: IP65 according to EN 60529

Dimensions

T2

Indicator plug

Seal	Ordering code
HNBR	T2 H
FPM	T2 V

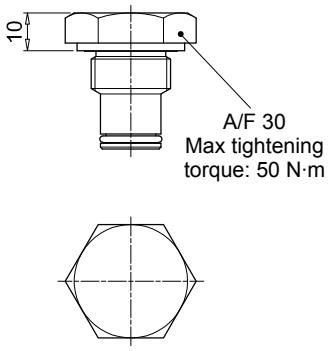

Materials

- Body: Phosphatized steel
- Seal: HNBR / FPM

DESIGNATION & ORDERING CODE - DIFFERENTIAL INDICATORS

Configuration example 1:	DE	M	50	H	F	50	P01
Configuration example 2:	DE	H	50	F	A	70	P01
Configuration example 3:	DL	E	70	V	A	71	P01
Configuration example 4:	DT	A	50	H	F	70	P01
Configuration example 5:	DV	M	95	V			P01

Series

DE	Electrical or Electronic differential indicator
DL	Electrical / Visual differential indicator
DT	Electronic differential indicator
DV	Visual differential indicator

Type	DE	DL	DT
A Standard type	•	•	•
M With wired electrical connection	•		
E For high power supply		•	
H Hazardous area	•		

DV	
A	With automatic reset
M	With manual reset

Pressure setting	DEA	DEH	DEM	DLA	DLE	DT	DV
50 5 bar	•	•	•	•	•	•	•
70 7 bar	•	•	•	•	•	•	•
95 9.5 bar	•		•	•	•	•	•

Seals	DEA	DEH	DEM	DLA	DLE	DT	DV
F MFQ		•					
H HNBR	•		•	•	•	•	•
V FPM	•	•	•	•	•	•	•

Thermostat	DEA	DEH	DEM	DLA	DLE	DT	DV
A Without	•	•	•	•	•		
F With thermostat			•		•	•	

Electrical connections	DEA	DEH	DEM	DLA	DLE	DT	DV
10 Connection AMP Superseal series 1.5			•				
20 Connection AMP Timer Junior			•				
30 Connection Deutsch DT-04-2-P			•				
35 Connection Deutsch DT-04-3-P			•				
48 Connection via three-core cable - fitting M20x1.5		•					
49 Connection via four-core cable - fitting 1/2” NPT		•					
50 Connection EN 175301-803	•				•		
51 Connection EN 175301-803, transparent base with lamps 24 Vdc				•			
52 Connection EN 175301-803, transparent base with lamps 110 Vdc				•			
70 Connection IEC 61076-2-101 D (M12)		•				•	
71 Connection IEC 61076-2-101 D (M12), black base with lamps 24 Vdc				•			

Option

P01	MP Filtri standard
Pxx	Customized

DESIGNATION & ORDERING CODE - DIFFERENTIAL INDICATOR PLUG

Configuration example	T2	H

Series

T2	Indicator plug

Seals

H	HNBR
V	FPM

Clogging indicators are devices that check the life time of the filter elements. They measure the pressure drop through the filter element directly connected to the filter housing.
These devices trip when the clogging of the filter element causes a pressure drop increasing across the filter element.
Filter elements are efficient only if their Dirt Holding Capacity is fully exploited. This is achieved by using filter housings equipped with clogging indicators. The indicator is set to alarm before the element becomes fully clogged.

MP Filtri can supply indicators of the following designs:
- **Vacuum switches and gauges**
- **Pressure switches and gauges**
- **Differential pressure indicators**

These type of devices can be provided with a visual, electrical or both signals. The electronic differential pressure clogging indicator is also available. It provides both analogical 4-20 mA output and digital warning (75% of clogging) and alarm (clogging) outputs.

Clogging Indicators

Clogging indicators

Suitable indicator types

VACUUM INDICATORS
Vacuum indicators are used on the Suction line to check the efficiency of the filter element.
They measure the pressure downstream of the filter element.
Standard items are produced with R 1/4" EN 10226 connection.
Available products with R 1/8" EN 10226 to be fitted on MPS series.

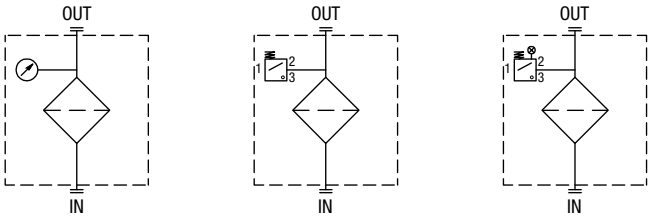

BAROMETRIC INDICATORS
Pressure indicators are used on the Return line to check the efficiency of the filter element.
They measure the pressure upstream of the filter element.
Standard items are produced with R 1/8" EN 10226 connection.

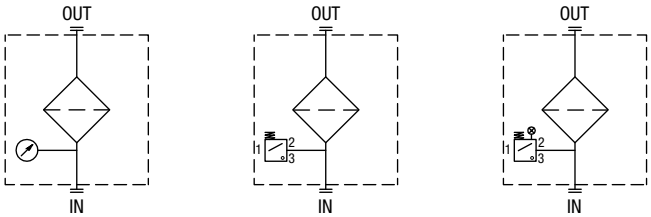

DIFFERENTIAL INDICATORS
Differential indicators are used on the Pressure line to check the efficiency of the filter element.
They measure the pressure upstream and downstream of the filter element (differential pressure).
Standard items are produced with special connection G 1/2" size.
Also available in Stainless Steel models.

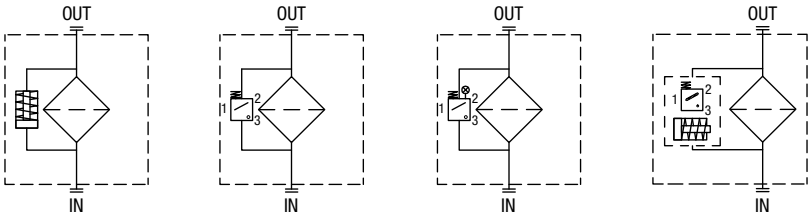

Filter family	Filter series		Electrical indicator	Electrical / Visual indicator	Electronic indicator	Visual indicator
SUCTION FILTERS	ELIXIR® SFEX060-080-110-160		VEB21AA50P01	VLB21AA51P01 VLB21AA52P01 VLB21AA53P01 VLB21AA71P01		VVB16P01 VVS16P01
	SF2 250 - 350 SF2 500 - 501 - 503 - 504 - 505 SF2 510 - 535 - 540		VEA21AA50P01	VLA21AA51P01 VLA21AA52P01 VLA21AA53P01 VLA21AA71P01		VVA16P01 VVR16P01
RETURN FILTERS	With bypass valve	ELIXIR® RFEX060-080-110-160	BEA15HA50P01 BEM15HA41P01	BLA15HA51P01 BLA15HA52P01 BLA15HA53P01 BLA15HA71P01		BVA14P01 BVR14P01 BVP15HP01 BVQ15HP01
	Without bypass valve	ELIXIR® RFEX060-080-110-160	BEA20HA50P01 BEM20HA41P01	BLA20HA51P01 BLA20HA52P01 BLA20HA53P01 BLA20HA71P01		BVA25P01 BVR25P01 BVP20HP01 BVQ20HP01
	With bypass valve	MPFX-MPTX-MPF-MPT - bypass 1.75 bar MPH - bypass 1.75 bar RF2250 - RF2350 - bypass 1.75 bar	BEA15HA50P01 BEM15HA41P01	BLA15HA51P01 BLA15HA52P01 BLA15HA53P01 BLA15HA71P01		BVA14P01 BVR14P01 BVP15HP01 BVQ15HP01
	With bypass valve	MPFX-MPTX-MPF-MPT - bypass 3 bar MPH - bypass 2.5 bar FRI 255 RF2250 - RF2350 - bypass 3 bar	BEA20HA50P01 BEM20HA41P01	BLA20HA51P01 BLA20HA52P01 BLA20HA53P01 BLA20HA71P01		BVA25P01 BVR25P01 BVP20HP01 BVQ20HP01
	MPLX FRI 025 - 040 - 100 - 250 - 630 - 850		DEA20xA50P01 DEM20xA10P01 DEM20xA20P01 DEM20xA30P01 DEM20xA35P01	DLA20xA51P01 DLA20xA52P01 DLA20xA71P01 DLE20xA50P01 DLE20xF50P01	DTA20xF70P01	DVA20xP01 DVM20xP01
RETURN / SUCTION FILTERS	Suction line	MRSX 116 - 165 - 166	VEB21AA50P01	VLB21AA51P01 VLB21AA52P01 VLB21AA53P01 VLB21AA71P01		VVB16P01 VVS16P01
	Return line	MRSX 116 - 165 - 166 LMP 124 MULTIPORT	BEA25HA50P01 BEM25HA41P01 BET25HF10P01 BET25HF30P01 BET25HF50P01	BLA25HA51P01 BLA25HA52P01 BLA25HA53P01 BLA25HA71P01		BVA25P01 BVR25P01 BVP20HP01 BVQ20HP01
SPIN-ON FILTERS	Suction line	MPS 050 - 070 - 100 - 150 MPS 200 - 250 - 300 - 350	VEB21AA50P01	VLB21AA51P01 VLB21AA52P01 VLB21AA53P01 VLB21AA71P01		VVB16P01 VVS16P01
	Return line	MPS 050 - 070 - 100 - 150 MPS 200 - 250 - 300 - 350	BEA15HA50P01 BEM15HA41P01	BLA15HA51P01 BLA15HA52P01 BLA15HA53P01 BLA15HA71P01		BVA14P01 BVR14P01 BVP20HP01 BVQ20HP01
	In-line	MPS 051 - 071 - 101 - 151 MPS 301 - 351 MSH 050 - 070 - 100 - 150	DEA12xA50P01 DEM12xAxxP01	DLA12xA51P01 DLA12xA52P01 DLA12xA71P01 DLE12xA50P01 DLE12xF50P01 DLE20xF50P01 DLE20xF50P01	DTA12xA70P01 DTA12xF70P01 DTA20xA70P01 DTA20xF70P01	DVA12xP01 DVM12xP01

QUICK REFERENCE GUIDE

Filter family	Filter series		Electrical indicator	Electrical / Visual indicator	Electronic indicator	Visual indicator	Hazardous area electronic indicator Ex
LOW & MEDIUM PRESSURE FILTERS	With bypass valve	ELIXIR® LFEX060-080-110-160	DES25HA10P01 DES25HA30P01 DES25HA80P01			DVS25HP01	
	Without bypass valve	ELIXIR® LFEX060-080-110-160	DES40HA10P01 DES40HA30P01 DES40HA80P01			DVS40HP01	
	With bypass valve	LMP 110 - 112 - 116 - 118 - 119 MULTIPORT LMP 120 - 122 - 123 MULTIPORT LMP 210 - 211 - LDP LMP 400 - 401 & 430 - 431 LMP 900 - 901 LMP 902 - 903 LMP 950 - 951 LMP 952 - 953 - 954 LMD 211 - 400 - 401 - 431 - 951 - LDD	DEA20xA50P01 DEM20xAxxP01	DLA20xA51P01 DLA20xA52P01 DLA20xA71P01 DLE20xA50P01 DLE20xF50P01	DTA20xF70P01	DVS25HP01 DVS40HP01 DVA20xP01 DVM20xP01	
	Without bypass valve	LMP 110 - 112 - 116 - 118 - 119 MULTIPORT LMP 120 - 122 - 123 MULTIPORT LMP 210 - 211 - LDP LMP 400 - 401 & 430 - 431 LMP 900 - 901 LMP 902 - 903 LMP 950 - 951 LMP 952 - 953 - 954 LMD 211 - 400 - 401 - 431 - 951 - LDD	DEA50xA50P01 DEM50xAxxP01	DLA50xA51P01 DLA50xA52P01 DLA50xA71P01 DLE50xA50P01 DLE50xF50P01	DTA50xF70P01	DVA50xP01 DVM50xP01	
HIGH PRESSURE FILTERS	With bypass valve	FMP 039 - 065 - 135 - 320 FHP 010 - 011 - 065 - 135 - 350 - 500 FMM 050 - 150 FHA 051 FHM 006 - 007 - 010 - 050 - 065 - 135 - 320 - 500 FHB 050 - 065 - 135 - 320 FHF 325 FHD 021 - 051 - 326 - 333	DEA50xA50P01 DEM50xAxxP01	DLA50xA51P01 DLA50xA52P01 DLA50xA71P01 DLE50xA50P01 DLE50xF50P01	DTA50xF70P01	DVA50xP01 DVM50xP01	DEH50xA48P01 DEH50xA49P01 DEH50xA70P01 DEH70xA48P01 DEH70xA49P01 DEH70xA70P01
	Without bypass valve	FMP 039 - 065 - 135 - 320 FHP 010 - 011 - 065 - 135 - 350 - 500 FMM 050 - 150 FHA 051 FHM 006 - 007 - 010 - 050 - 065 - 135 - 320 - 500 FHB 050 - 065 - 135 - 320 FHF 325 FHD 021 - 051 - 326 - 333	DEA70xA50P01 DEM70xAxxP01 DEA95xA50P01 DEM95xAxxP01	DLA70xA51P01 DLA70xA52P01 DLA70xA71P01 DLE70xA50P01 DLE70xF50P01 DLA95xA51P01 DLA95xA52P01 DLE95xA50P01 DLE95xF50P01	DTA70xF70P01 DTA95xF70P01	DVA70xP01 DVM70xP01 DVA95xP01 DVM95xP01	DEH50xA48P01 DEH50xA49P01 DEH50xA70P01 DEH70xA48P01 DEH70xA49P01 DEH70xA70P01
STAINLESS STEEL HIGH PRESSURE FILTERS	With bypass valve	FZH 010 - 011 - 039 FZP 039 - 136 FZX 011 FZB 039 FZM 039 FZD 051	DEX50xA50P01	DLX50xA51P01 DLX50xA52P01		DVX50xP01 DVY50xP01	DEH50xA48P01 DEH50xA49P01 DEH50xA70P01 DEH70xA48P01 DEH70xA49P01 DEH70xA70P01
	Without bypass valve	FZH 010 - 011 - 039 FZP 039 - 136 FZB 039 FZM 039 FZD 010 - 021 - 051	DEX70xA50P01 DEX95xA50P01	DLX70xA51P01 DLX70xA52P01 DLX95xA51P01		DVX70xP01 DVY70xP01 DVX95xP01 DVY95xP01	DEH50xA48P01 DEH50xA49P01 DEH50xA70P01 DEH70xA48P01 DEH70xA49P01 DEH70xA70P01

NOTES

All data, details and words contained in this publication are provided for information purposes only.
MP Filtri reserves the right to make modifications to the models and versions of the described products at any time for both technical and / or commercial reasons.
The colors and the pictures of the products are purely indicative.
Any reproduction, partial or total, of this document is strictly forbidden.
All rights are strictly reserved.

WORLDWIDE NETWORK

HEADQUARTERS

MP Filtri S.p.A.
Pessano con Bornago
Milano
Italy
sales@mpfiltri.com

BRANCH OFFICES

ITALFILTRI LLC
Moscow
Russia
mpfiltrirussia@yahoo.com

MP Filtri Canada Inc.
Concord, Ontario
Canada
sales@mpfiltricanada.com

MP Filtri France SAS
Lyon
AURA
France
sales@mpfiltrifrance.com

MP Filtri Germany GmbH
St. Ingbert
Germany
sales@mpfiltri.de

MP Filtri India Pvt. Ltd.
Bangalore
India
sales@mpfiltri.co.in

MP Filtri (Shanghai) Co., Ltd.
Shanghai
P.R. China
sales@mpfiltrishanghai.com

MP Filtri SEA PTE Ltd.
Singapore
sales-sea@mpfiltri.com

MP Filtri U.K. Ltd.
Bourton on the Water
Gloucestershire
United Kingdom
sales@mpfiltri.co.uk

MP Filtri U.S.A. Inc.
Quakertown, PA
U.S.A.
sales@mpfiltriusa.com

PASSION TO PERFORM

mpfiltri.com

CMPEN001G
EN - Rev. 04-2022